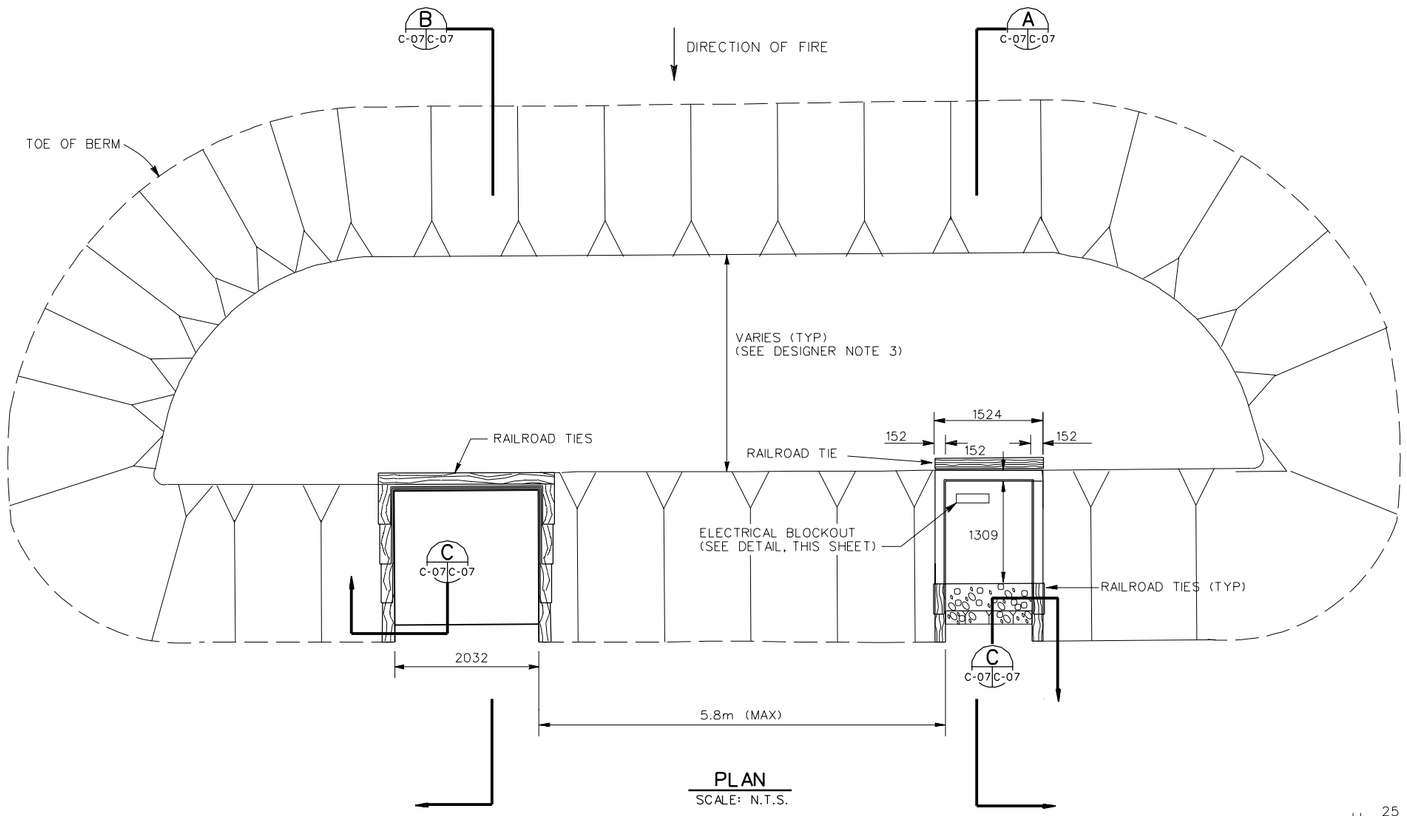

PLAN

SCALE: N.T.S.

GENERAL NOTES:

1. CONCRETE SHALL DEVELOP A MINIMUM COMPRESSIVE STRENGTH OF 28 MPa IN 28 DAYS.
2. SMALLER EMPLACEMENT (SECTION A) SHALL BE CONSTRUCTED OF REINFORCED CONCRETE; CONCRETE STRUCTURE SHALL BE PRECAST OR CAST-IN-PLACE.
3. ALL REINFORCING STEEL SHALL BE PER ASTM A615, GRADE 60.
4. RETAINING WALLS, INCLUDING LARGER EMPLACEMENT (SECTION B), SHALL BE CONSTRUCTED OF RAILROAD TIES AND SECURED WITH #16 DEFORMED STEEL REINFORCING BARS DRIVEN VERTICALLY THROUGH FIELD-DRILLED HOLES. THE BARS SHALL HAVE A MINIMUM LENGTH OF 460mm AND SHALL BE LOCATED TO SECURE TIMBER ENDS AND ON A 610mm SPACING. FILTER FABRIC SHALL BE INSTALLED BEHIND ALL WOOD RETAINING WALLS. FABRIC SHALL EXTEND THE FULL HEIGHT OF THE WALL.
5. AREAS DISTURBED BY CONSTRUCTION ACTIVITIES SHALL BE REVEGETATED OR RESURFACED CONSISTENT WITH THE NATURAL SURROUNDINGS. GROUND COVER SHALL NOT REDUCE EMPLACEMENT VISIBILITY.
6. PLACE RAILROAD TIES AGAINST CONCRETE WALL ON L102 x 102 x 12.7mm x 100mm STEEL ANGLES SPACED A MAXIMUM OF 900mm ON CENTER. ATTACH ANGLE TO CONCRETE WALL WITH CONCRETE ANCHORS.
7. ALL DIMENSIONS ARE mm UNLESS OTHERWISE INDICATED

NOTES TO DESIGNER:

1. FOR DETAILS OF THE CABLE JUNCTION BOX, REFER TO THE ELECTRICAL DRAWINGS.
2. THE NEED FOR FILTER FABRIC SHOULD BE EVALUATED AS PART OF THE SITE ADAPTION PROCESS. A FILTER LAYER MAY OR MAY NOT BE REQUIRED DEPENDING UPON THE SOIL TYPE AT A PARTICULAR SITE.
3. REFER TO THE BERM THICKNESS FIGURES LOCATED IN THE DESIGN MANUAL TO DETERMINE THE REQUIRED BERM THICKNESS.

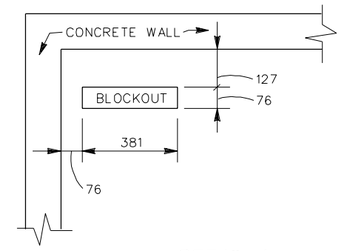

DETAIL 1
ELECTRICAL BLOCKOUT DETAIL

SCALE: N.T.S.

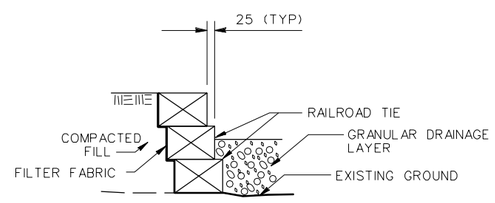

SECTION C-07 C-07

SCALE : N.T.S.

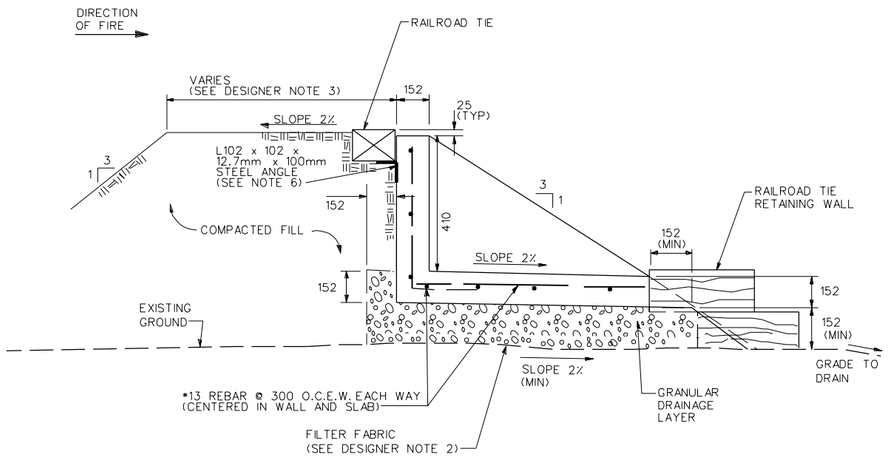

SECTION A C-07 C-07

SCALE : N.T.S.

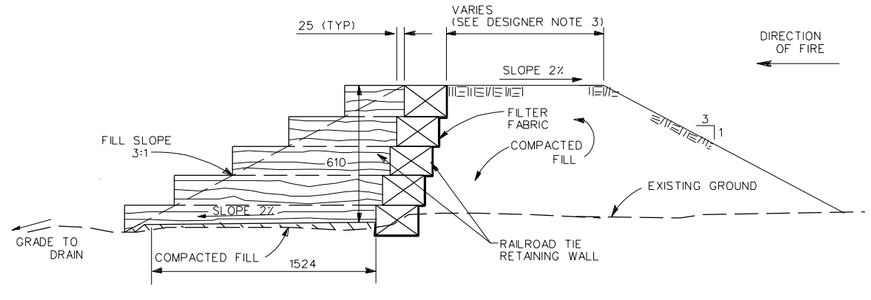

SECTION B C-07 C-07

SCALE : N.T.S.

US Army Corps of Engineers

Symbol	Description	Date	Approved	Symbol	Description	Date	Approved

Designed by: N/A
Dwn by: DFH
Ckd by: GGG
Reviewed by: GGG
Submitted by: REB
Date: 01 APR 98
Rev.
Design file no.
Drawing code: STD 179-00-01
File name: STDC07.DGN
Plot date: 20 MAR 98
Plot scale: FULL

U. S. ARMY ENGINEERING AND SUPPORT CENTER, HUNTSVILLE
HUNTSVILLE, ALABAMA

FORCE XXI/FORCE MODERNIZATION PROGRAM
STANDARD DESIGN

MORTAR SIMULATION DEVICE EMPLACEMENT

Sheet reference number:
C -07
Sheet of