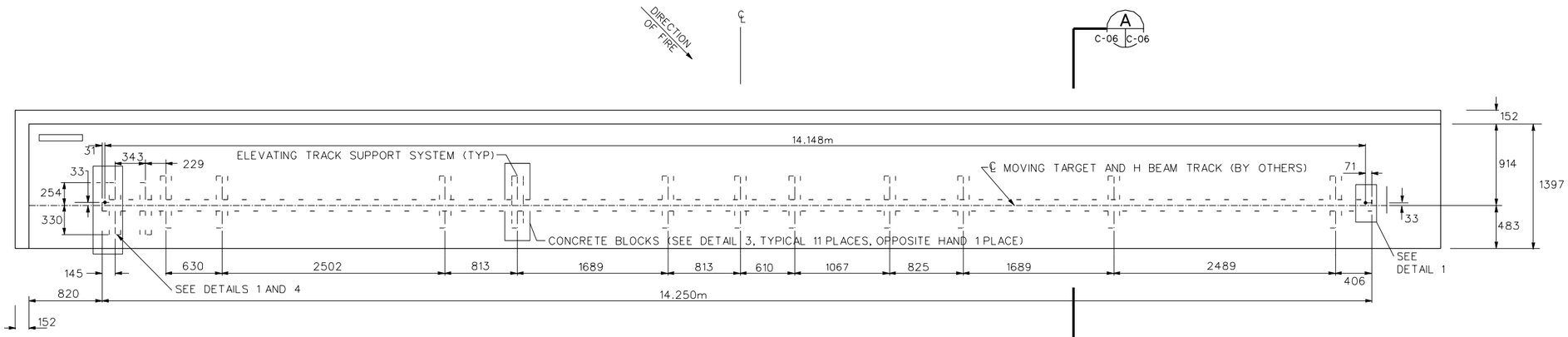

PLAN - INFANTRY MOVING TARGET EMPLACEMENT - TRACK SUPPORT DETAILS

SCALE: N.T.S.

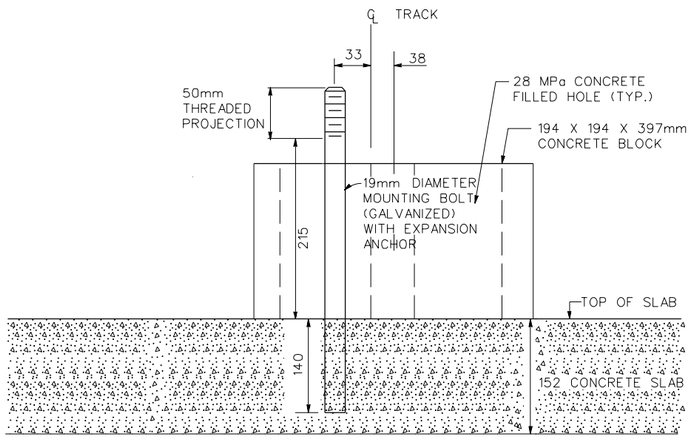

DETAIL 1
MOUNTING BOLT DETAIL

SCALE: N.T.S.

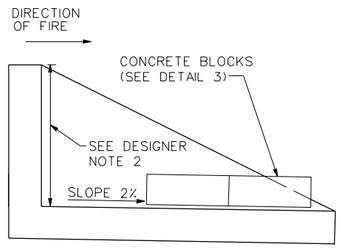

SECTION A

SCALE : N.T.S. C-06 C-06

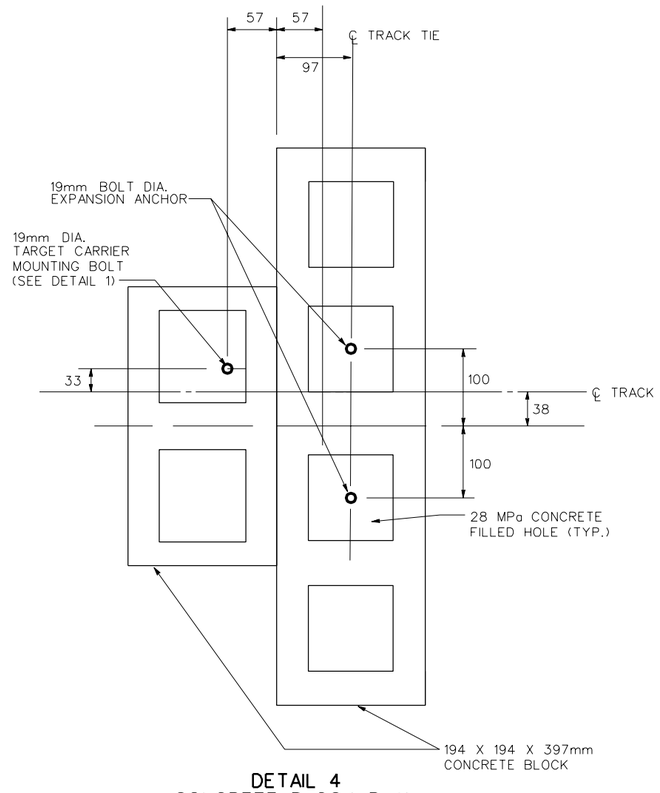

DETAIL 4
CONCRETE BLOCK PLAN

SCALE: N.T.S.

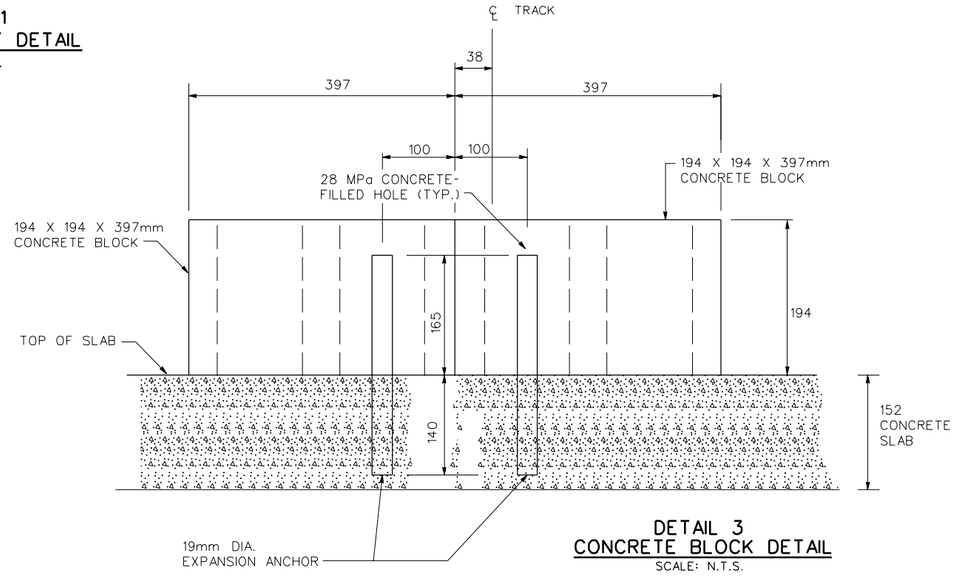

DETAIL 3
CONCRETE BLOCK DETAIL

SCALE: N.T.S.

(TYPICAL 11 PLACES, OPPOSITE HAND 1 PLACE)

NOTES:

1. ALL DIMENSIONS ARE mm UNLESS OTHERWISE INDICATED

NOTES TO DISIGNER

1. USE THESE DETAILS IF TRACK IS TO BE ELEVATED (IN ADDITION TO SHEET C-05)
2. FRONT WALL HEIGHT TO BE 194mm HIGHER THAN SHOWN IN TABLE 1 ON SHEET C-05
3. REPLACE DETAIL 1 ON SHEET C-05 WITH DETAILS 1 AND 4 ON THIS SHEET

US Army Corps of Engineers

Symbol	Description	Date	Approved	Symbol	Description	Date	Approved

Date: 01 APR 98 | Rev.
Designed by: N/A | Design file no.
Dwn by: DFH | Ckd by: GGG
Reviewed by: GGG | Drawing code: STD 179-00-01
Submitted by: REB | File name: STD06.DGN Plot date: 20 MAR 98 Plot scale: FULL

U.S. ARMY ENGINEERING AND SUPPORT CENTER, HUNTSVILLE
HUNTSVILLE, ALABAMA

FORCE XXI/FORCE MODERNIZATION PROGRAM
STANDARD DESIGN

INFANTRY MOVING TARGET EMPLACEMENT
(ELEVATED OPTION)

Sheet reference number:
C -06
Sheet of