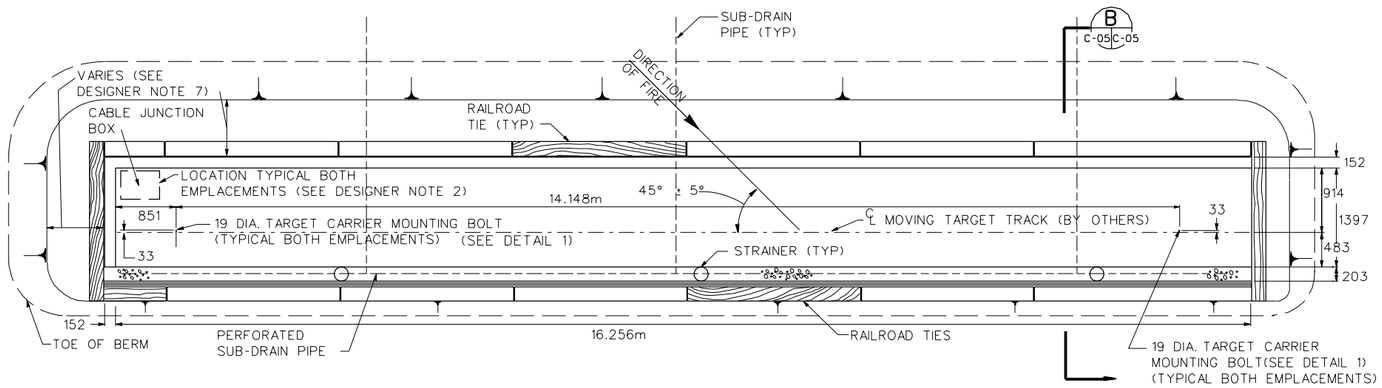

PLAN - INFANTRY MOVING TARGET EMPLACEMENT - ASCENDING SLOPE OR BELOW GRADE

SCALE: N.T.S.

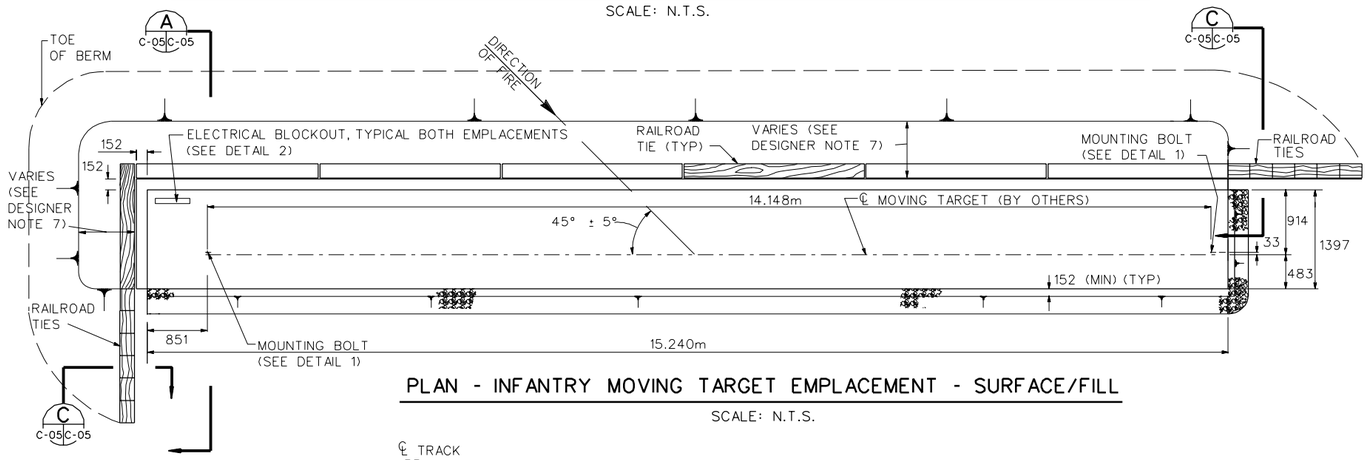

PLAN - INFANTRY MOVING TARGET EMPLACEMENT - SURFACE/FILL

SCALE: N.T.S.

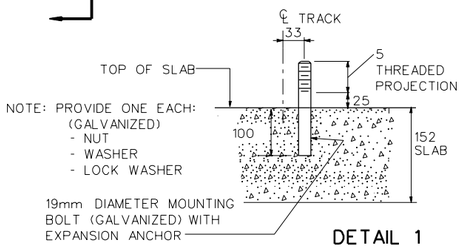

DETAIL 1
MOUNTING BOLT DETAIL

SCALE: N.T.S.

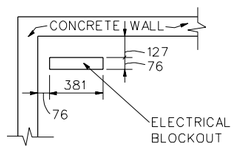

DETAIL 2
ELECTRICAL BLOCKOUT DETAIL

SCALE: N.T.S.

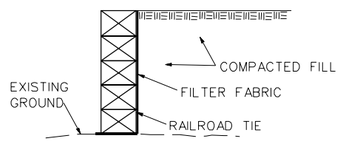

SECTION C

SCALE : N.T.S.

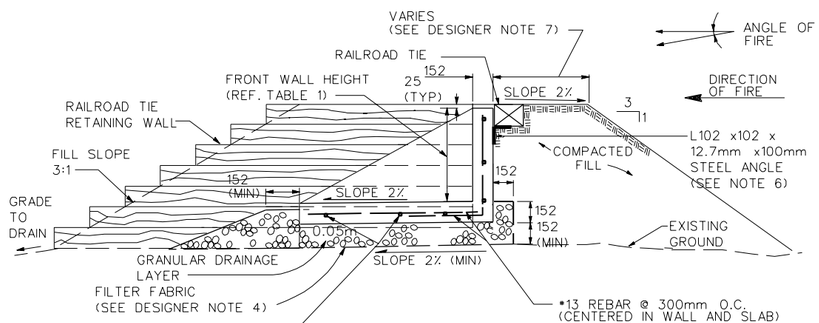

SECTION A

SCALE : N.T.S.

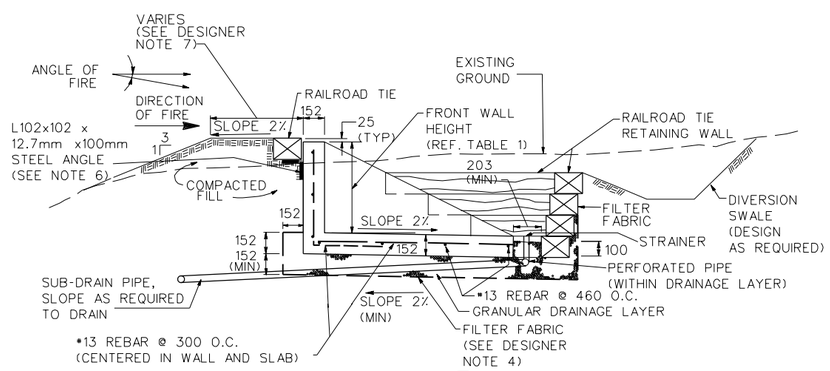

SECTION B

SCALE : N.T.S.

GENERAL NOTES:

1. CONCRETE SHALL DEVELOP A MINIMUM COMPRESSIVE STRENGTH OF 28 MPa IN 28 DAYS.
2. EMPLACEMENTS SHALL BE CONSTRUCTED OF REINFORCED CONCRETE; CONCRETE STRUCTURES SHALL BE PRECAST OR CAST-IN-PLACE.
3. ALL REINFORCING STEEL SHALL BE PER ASTM A615, GRADE 60.
4. RETAINING WALLS SHALL BE CONSTRUCTED OF TREATED TIMBERS OR RAILROAD TIES & SECURED WITH •16 DEFORMED STEEL REINFORCING BARS DRIVEN VERTICALLY THROUGH FIELD-DRILLED HOLES. THE BARS SHALL HAVE A MINIMUM LENGTH OF 460mm & SHALL BE LOCATED ON A 610mm SPACING. FILTER FABRIC SHALL BE INSTALLED BEHIND ALL WOOD RETAINING WALLS. FABRIC SHALL EXTEND THE FULL HEIGHT OF THE WALL.
5. AREAS DISTURBED BY CONSTRUCTION ACTIVITIES SHALL BE REVEGETATED OR RESURFACED CONSISTENT WITH THE NATURAL SURROUNDINGS. GROUND COVER SHALL NOT REDUCE TARGET VISIBILITY.
6. PLACE RAILROAD TIES AGAINST CONCRETE WALL ON L102 x 102 x 12.7mm x 100mm STEEL ANGLES SPACED A MAXIMUM OF 900mm ON CENTER. ATTACH ANGLE TO CONCRETE WALL WITH CONCRETE ANCHORS.
7. ALL DIMENSIONS ARE mm UNLESS OTHERWISE INDICATED.
8. THE EMPLACEMENT MAY BE REVERSED OR MIRRORED FROM WHAT IS SHOWN HERE. IN ANY CASE, THE PROTECTED END OF THE EMPLACEMENT IS ALWAYS NEARER TO THE FIRING POINT AND THE ELECTRIAL BLOCKOUT IS ON THE PROTECTED END.

NOTES TO DESIGNER:

1. THE MOVING TARGET TRACK IS TO BE PROVIDED AND INSTALLED BY OTHERS AND IS SHOWN FOR INFORMATION ONLY. IF THE TRACK IS TO BE ELEVATED DUE TO SITE SPECIFIC REQUIREMENTS, SUPPORT SHOULD BE PROVIDED FOR EACH TIE.
2. FOR DETAILS OF THE CABLE JUNCTION BOX (CJB), REFER TO ELECTRICAL DRAWINGS.
3. EMPLACEMENT WALL HEIGHTS SHOULD BE SELECTED (INTERPOLATED) FROM TABLE 1 BASED ON ACTUAL ANGLES OF FIRE. IF THE TRACK IS TO BE ELEVATED, THE REQUIRED FRONT WALL HEIGHT SHOULD BE INCREASED BY THE DISTANCE BETWEEN THE BOTTOM OF THE TIE AND THE TOP OF THE CONCRETE SLAB. TABLE 1 IS FOR DESIGNER ONLY.
4. THE NEED FOR FILTER FABRIC SHOULD BE EVALUATED AS PART OF THE SITE ADAPTION PROCESS. A FILTER LAYER MAY OR MAY NOT BE REQUIRED DEPENDING UPON THE SOIL TYPE AT A PARTICULAR SITE.
5. FOR LOCATIONS REQUIRING DIRECTION OF FIRE OF 45°±5° FROM RIGHT OF TRACK CENTERLINE, PLANS AND SECTIONS SHOULD BE ANNOTATED FOR CONSTRUCTION IN A MIRROR IMAGE CONFIGURATION TO THAT SHOWN, WITH THE CJB BEING PLACED AT THE END OF THE EMPLACEMENT NEAREST TO THE FIRING POSITION.
6. THE DESIGNER SHOULD USE THE BELOW GRADE EMPLACEMENT DESIGN TO PROVIDE MORE REALISTIC TRAINING, IF THE SITE CONDITIONS ARE ADEQUATE TO SUPPORT POSITIVE DRAINAGE OF THE TARGET EMPLACEMENT. THE TOP OF THE SUBGRADE SHOULD HAVE A MINIMUM LONGITUDINAL SLOPE OF 2% TOWARD THE FRONT OF THE EMPLACEMENT.
7. REFER TO THE BERM THICKNESS FIGURES LOCATED IN THE DESIGN MANUAL TO DETERMINE THE REQUIRED BERM THICKNESS.
8. BERM SLOPES SHOWN AS 3:1 ARE MAXIMUM. FLATTER SLOPES MAY BE REQUIRED BY SITE SPECIFIC GEOTECHNICAL REPORT.

TABLE 1

INFANTRY MOVING TARGET CARRIER EMPLACEMENT	
ANGLE OF FIRE	FRONT WALL HEIGHT (mm)
0.0°	660
2.0°	711
4.0°	762
6.0°	813
8.0°	864
10.0°	914
12.0°	965
14.0°	1016
16.0°	1067
18.0°	1118
20.0°	1168
22.0°	1219

US Army Corps of Engineers

Symbol	Description	Date	Approved	Symbol	Description	Date	Approved

Designed by: N/A | Date: 01 APR 98 | Rev.
Dwn by: DFH | Ckd by: GCG | Design file no.
Reviewed by: GCG | Drawing code: STD 179-00-01
Submitted by: REB | File name: STDC05.DGN | Plot date: 01 MAR 98 | Plot scale: FULL

U.S. ARMY ENGINEERING AND SUPPORT CENTER, HUNTSVILLE HUNTSVILLE, ALABAMA

FORCE XXI/FORCE MODERNIZATION PROGRAM
STANDARD DESIGN

INFANTRY MOVING TARGET EMPLACEMENT

Sheet reference number: C -05

Sheet of