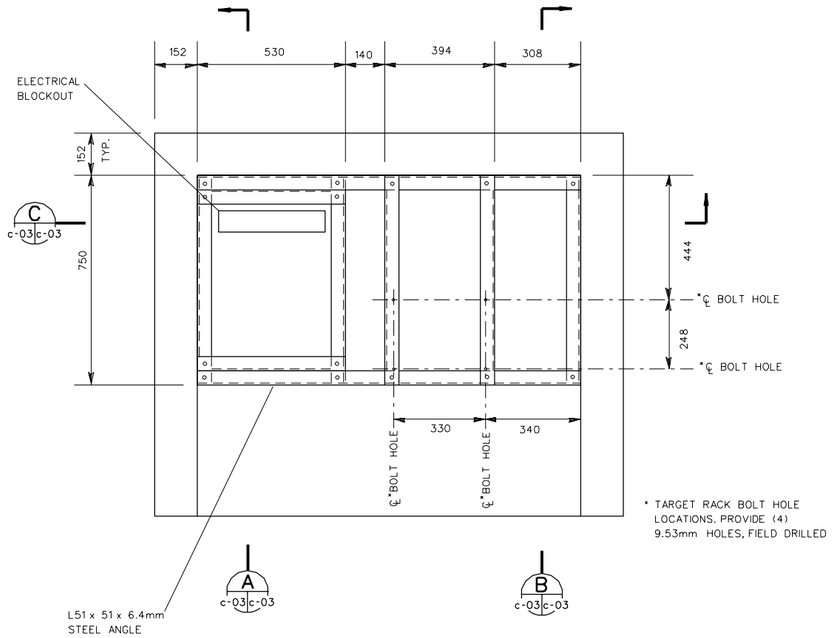

PLAN - TARGET RACK

SCALE : 1:10

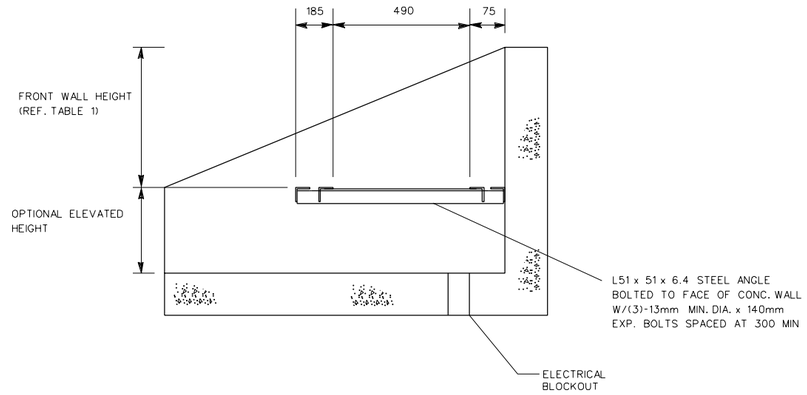

SECTION A

SCALE : 1:10 — C-03 c-03

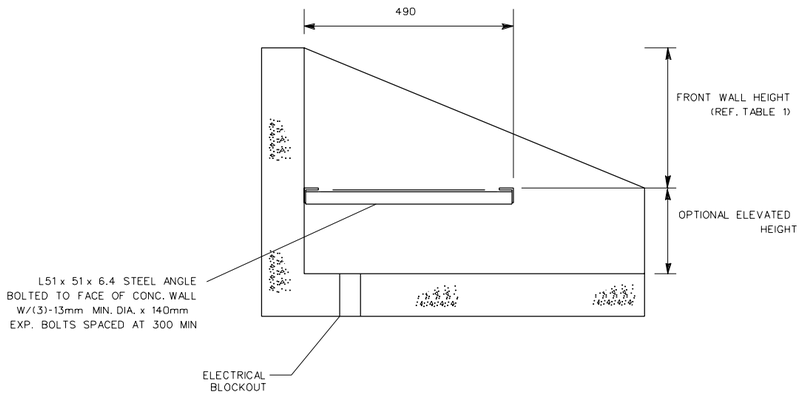

SECTION B

SCALE : 1:10 — C-03 c-03

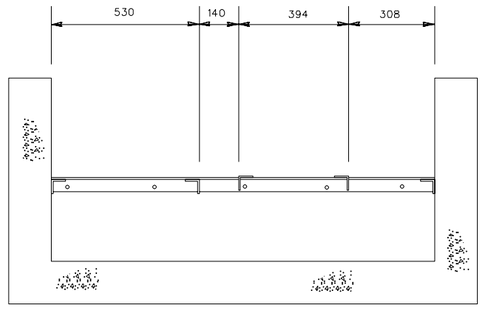

SECTION C

SCALE : 1:10 — C-03 c-03

GRAPHIC SCALES

1:10 — 200 100 0 200 400

US Army Corps of Engineers

Symbol	Description	Date	Approved	Symbol	Description	Date	Approved

Designed by: N/A
Date: 01 APR 98
Rev.
Dwn by: DFH
Ckd by: GGG
Design file no.
Reviewed by: GGG
Drawing code: STD 179-00-01
File name: STDC03.DGN
Plot date: 20 MAR 98
Plot scale: FULL
Submitted by: REB

U.S. ARMY ENGINEERING AND SUPPORT CENTER, HUNTSVILLE
HUNTSVILLE, ALABAMA

FORCE XXI/FORCE MODERNIZATION PROGRAM
STANDARD DESIGN

STATIONARY INFANTRY TARGET EMPLACEMENT
(ELEVATED OPTION) (2 OF 2)

Sheet reference number:
C-03

Sheet of