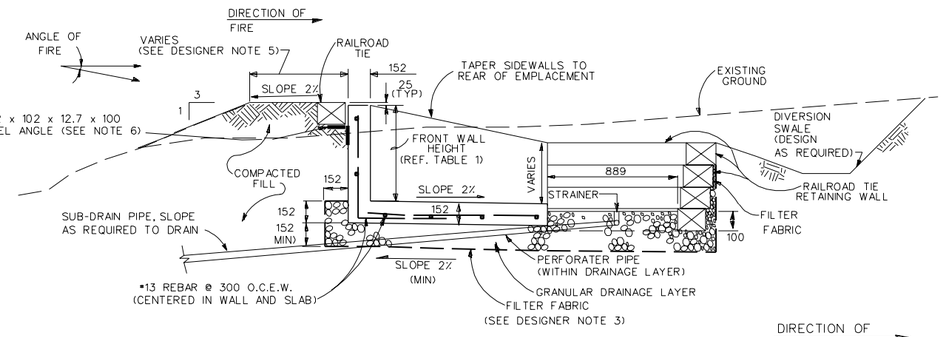

SECTION B C-01 C-01
SCALE: N.T.S.

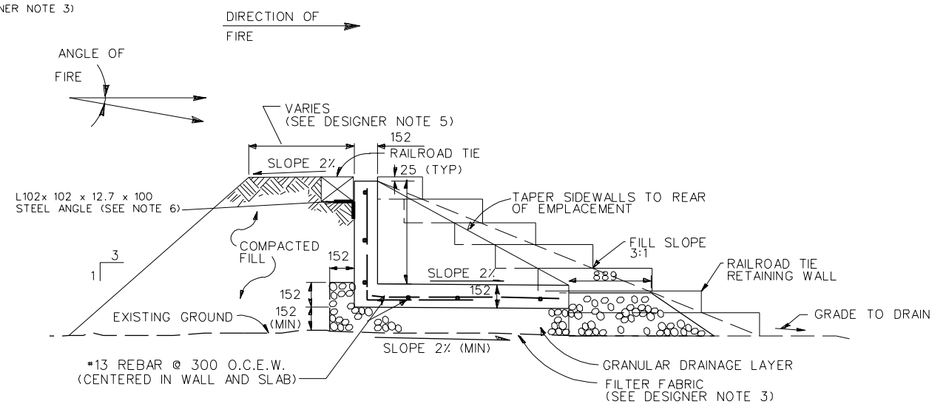

SECTION A C-01 C-01
SCALE: N.T.S.

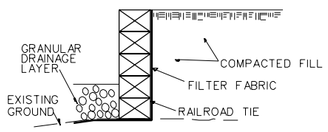

SECTION C C-01 C-01
SCALE: N.T.S.

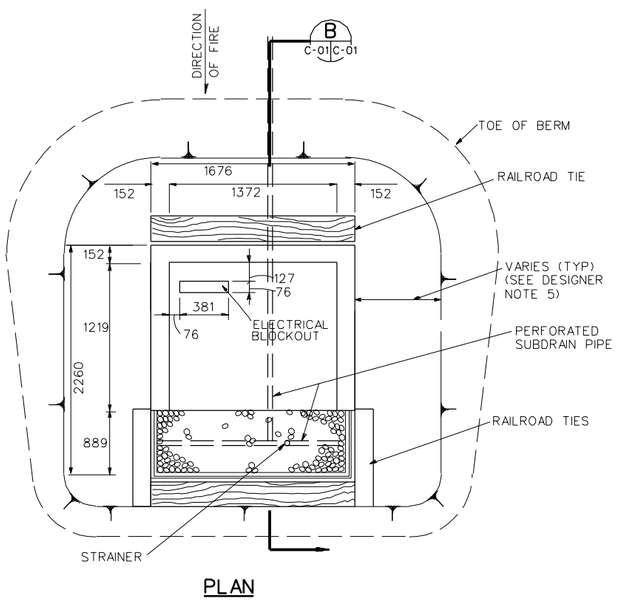

PLAN
ASCENDING SLOPE OR BELOW GRADE EMPLACEMENT
SCALE: N.T.S.

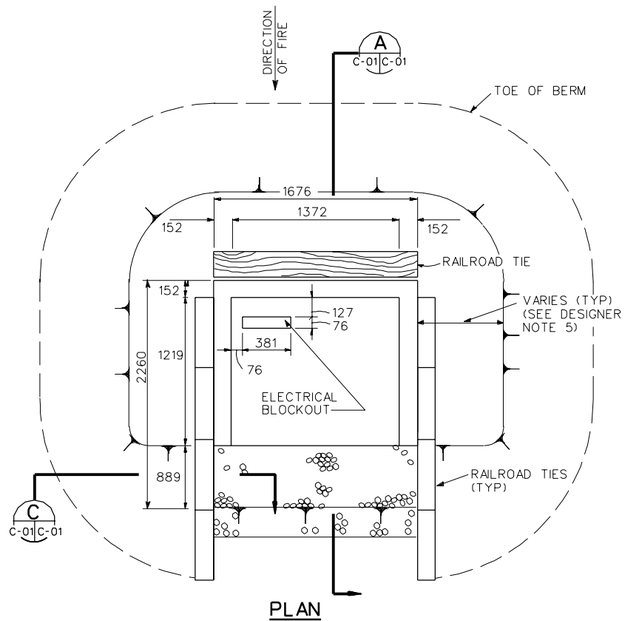

PLAN
SURFACE / FILL EMPLACEMENT
SCALE: N.T.S.

STATIONARY INFANTRY TARGET EMPLACEMENT

GENERAL NOTES:

1. CONCRETE SHALL DEVELOP A MINIMUM COMPRESSIVE STRENGTH OF 28 MPa IN 28 DAYS.
2. EMPLACEMENTS SHALL BE CONSTRUCTED OF REINFORCED CONCRETE; CONCRETE STRUCTURES SHALL BE PRECAST OR CAST-IN-PLACE.
3. ALL REINFORCING STEEL SHALL BE PER ASTM A615, GRADE 60.
4. RETAINING WALLS SHALL BE CONSTRUCTED OF TREATED TIMBERS OR RAILROAD TIES & SECURED WITH #16M DEFORMED STEEL REINFORCING BARS DRIVEN VERTICALLY THROUGH FIELD-DRILLED HOLES. THE BARS SHALL HAVE A MINIMUM LENGTH OF 460mm & SHALL BE LOCATED ON A 610mm SPACING. FILTER FABRIC SHALL BE INSTALLED BEHIND ALL WOOD RETAINING WALLS. FABRIC SHALL EXTEND THE FULL HEIGHT OF THE WALL.
5. AREAS DISTURBED BY CONSTRUCTION ACTIVITIES SHALL BE REVEGETATED OR RESURFACED CONSISTENT WITH THE NATURAL SURROUNDINGS. GROUND COVER SHALL NOT REDUCE TARGET VISIBILITY.
6. PLACE RAILROAD TIES AGAINST CONCRETE WALL ON L102x 102 x 12.7mm x 100mm STEEL ANGLES SPACED A MAXIMUM OF 900mm ON CENTER. ATTACH ANGLE TO CONCRETE WALL WITH CONCRETE ANCHORS.
7. ALL DIMENSIONS ARE mm UNLESS OTHERWISE INDICATED.

NOTES TO DESIGNER:

1. FOR DETAILS OF THE CABLE JUNCTION BOX, REFER TO THE ELECTRICAL DRAWINGS.
2. EMPLACEMENT WALL HEIGHTS SHOULD BE SELECTED (INTERPOLATED) FROM TABLE 1 BASED ON ACTUAL ANGLES OF FIRE. IF THE TARGET MECHANISM IS TO BE ELEVATED, THE REQUIRED FRONT WALL HEIGHT SHOULD BE INCREASED BY THE DISTANCE BETWEEN THE BOTTOM OF THE MECHANISM AND THE TOP OF THE CONCRETE SLAB. TABLE 1 IS FOR DESIGNER ONLY.
3. THE NEED FOR FILTER FABRIC SHOULD BE EVALUATED AS PART OF THE SITE ADAPTION PROCESS. A FILTER LAYER MAY OR MAY NOT BE REQUIRED DEPENDING UPON THE SOIL TYPE AT A PARTICULAR SITE.
4. THE DESIGNER SHOULD USE THE BELOW GRADE EMPLACEMENT DESIGN TO PROVIDE MORE REALISTIC TRAINING, IF THE SITE CONDITIONS ARE ADEQUATE TO SUPPORT POSITIVE DRAINAGE OF THE TARGET EMPLACEMENT. THE TOP OF THE SUBGRADE SHOULD HAVE A MINIMUM LONGITUDINAL SLOPE OF 2% TOWARD THE FRONT OF THE EMPLACEMENT.
5. REFER TO THE BERM THICKNESS FIGURES LOCATED IN THE DESIGN MANUAL TO DETERMINE THE REQUIRED BERM THICKNESS.
6. BERM SLOPES SHOWN AS 3:1 ARE MAXIMUM. FLATTER SLOPES MAY BE REQUIRED BY SITE SPECIFIC GEOTECHNICAL REPORT.

TABLE 1

STATIONARY INFANTRY TARGET EMPLACEMENT	
ANGLE OF FIRE	FRONT WALL HEIGHT
0.0°	406 mm
4.0°	406 mm
8.0°	457 mm
12.0° **	508 mm **
16.0°	559 mm
20.0°	610 mm
24.0°	660 mm
28.0°	711 mm

** FOR COMBAT PISTOL QUALIFICATION COURSE ONLY, DESIGN MUST BE FOR 12° MINIMUM ANGLE OF FIRE.

US Army Corps of Engineers

Symbol	Description	Date	Approved	Symbol	Description	Date	Approved

Designed by: N/A
Date: 01 APR 98
Rev.
Dwn by: DFH
Ckd by: CGG
Design file no.
Drawing code: STD 179-00-01
Reviewed by: CGG
Submitted by: REB
File name: STDCD1.DGN
Plot date: 20 MAR 98
Plot scale: FULL

U. S. ARMY ENGINEERING AND SUPPORT CENTER, HUNTSVILLE
HUNTSVILLE, ALABAMA

FORCE XXI/FORCE MODERNIZATION PROGRAM
STANDARD DESIGN

STATIONARY INFANTRY TARGET EMPLACEMENT

Sheet reference number:
C-01