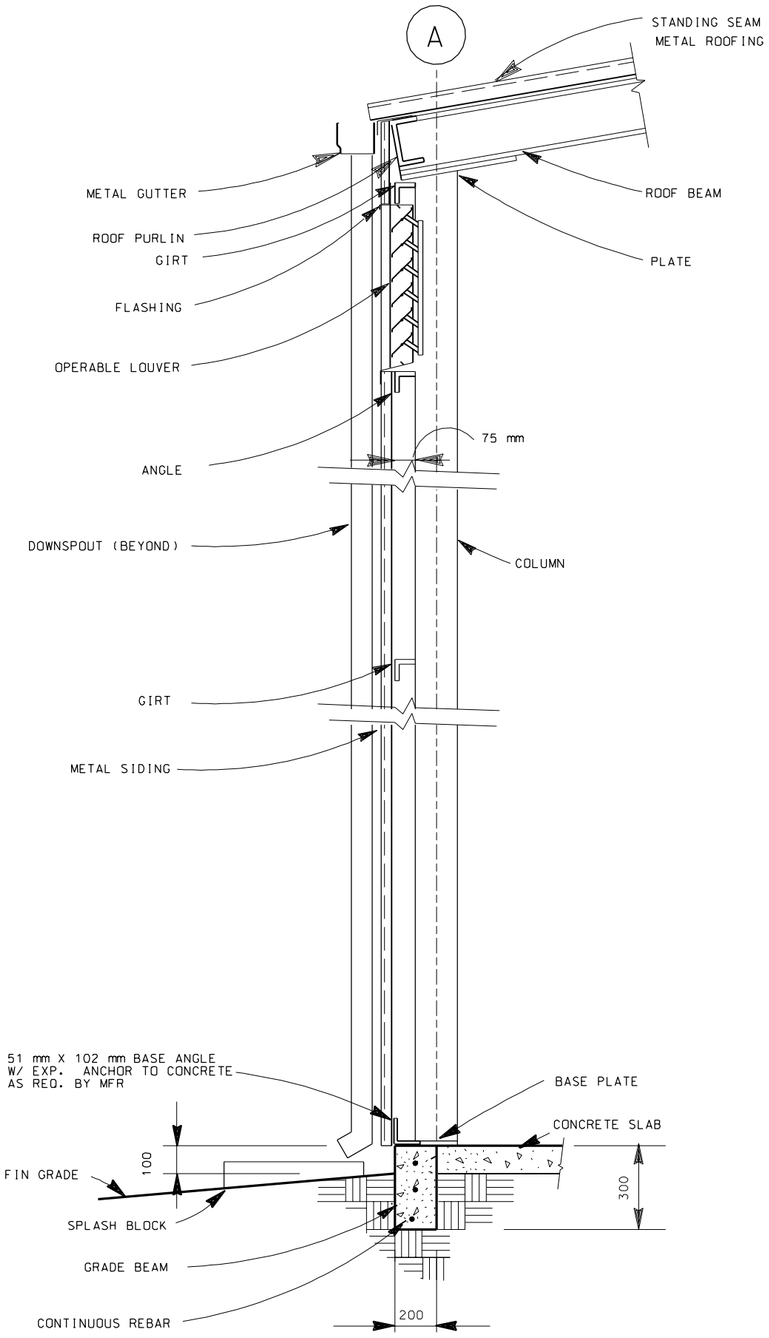

SECTION A
SCALE : 1 : 10
A-19 | AX-04

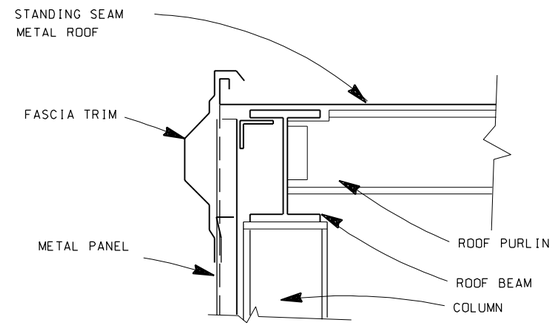

SECTION B
SCALE : 1 : 10
A-19 | AX-04
A-20

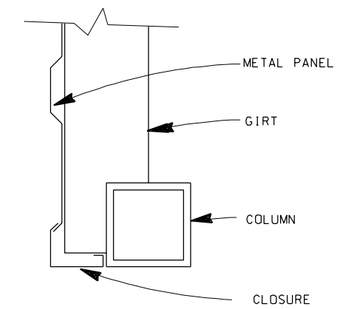

SECTION 1
SCALE : 1 : 10
A-19 | AX-04

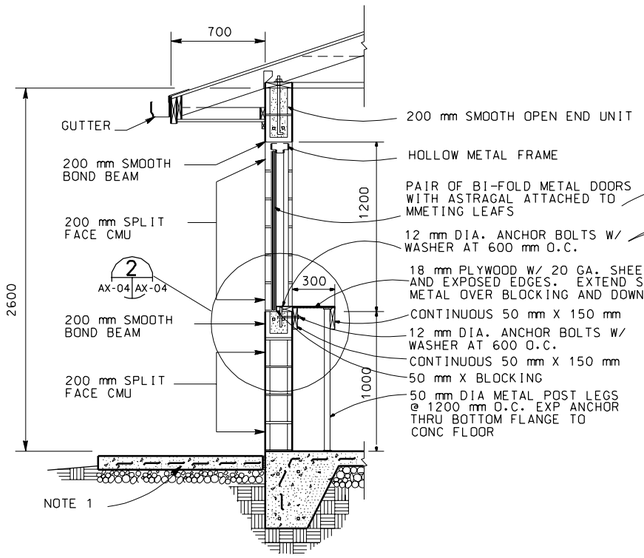

SECTION C
SCALE : 1 : 20
A-16 | AX-04

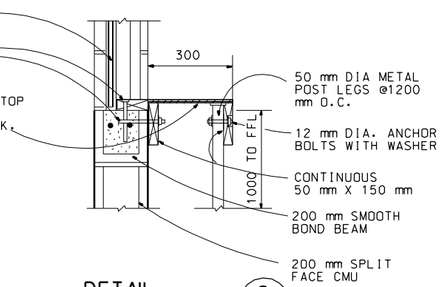

DETAIL 2
SCALE : 1 : 20
AX-04 | AX-04

NOTES

1. 1200 mm WIDE X 100 mm THICK CONCRETE SIDEWALK WITH WIRE MESH. SLOPE SIDEWALK 30 mm PER METER AWAY FROM BUILDING. SEE FACILITY PLAN FOR RELATION OF TOP OF SIDEWALK WITH FINISH FLOOR.
2. ALL DIMENSIONS ARE IN MILLIMETERS UNLESS OTHERWISE LABELED.

GRAPHIC SCALES

1:10 — 250 0 500

1:20 — 500 0 500 1000

US Army Corps of Engineers

Symbol	Description	Date	Approved	Symbol	Description	Date	Approved

Designed by: Date: 01 APR 98 Rev.
Dwn by: LM Ckd by: LM Design file no.
Reviewed by: RR Drawing code: STD 171-00-01
Submitted by: RR File name: STDAX04.DGN Plot date: 13 MAR 98 Plot scale: FULL

U.S. ARMY ENGINEERING AND SUPPORT CENTER, HUNTSVILLE
HUNTSVILLE, ALABAMA

FORCE XXI/FORCE MODERNIZATION PROGRAM
STANDARD DESIGN

WALL SECTIONS AND DETAILS
(MASONRY CONSTRUCTION)

Sheet reference number:
AX-04
Sheet of