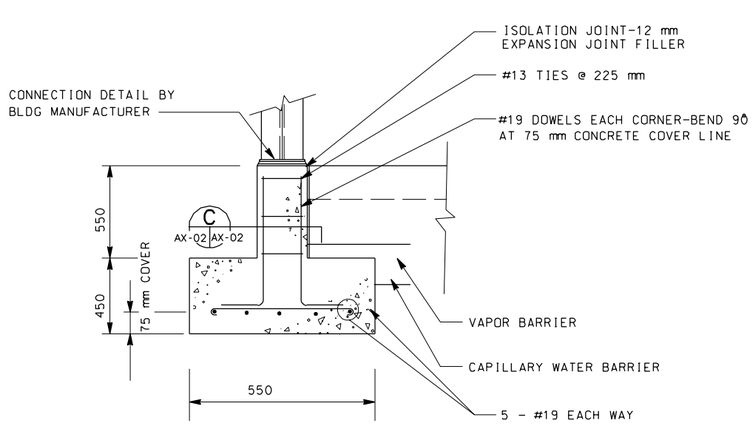

COLUMN FOOTING DETAIL

SCALE 1 : 20

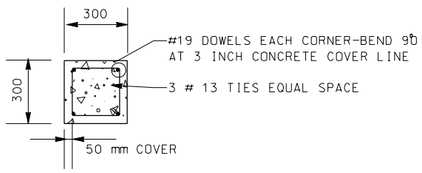

SECTION C AX-02 AX-02

SCALE : 1 : 20

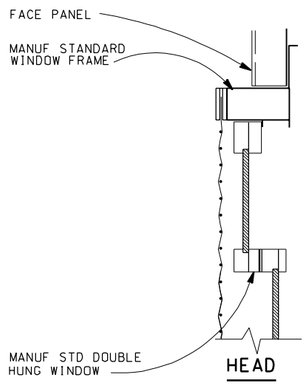

HEAD

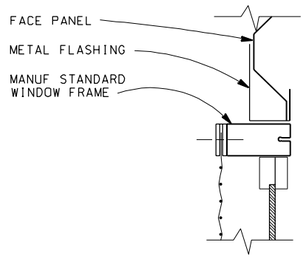

JAMB

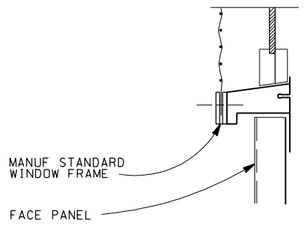

SILL

SCREEN DETAIL

SCALE 1 : 5

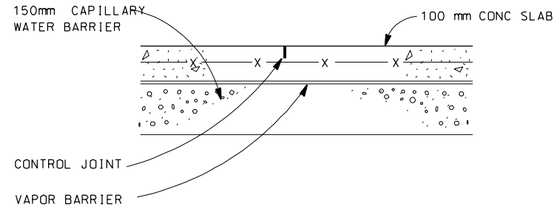

TYPICAL SECTION

SCALE 1 : 10

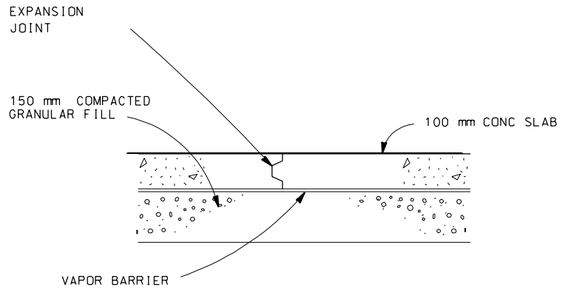

TYPICAL SECTION

SCALE 1 : 10

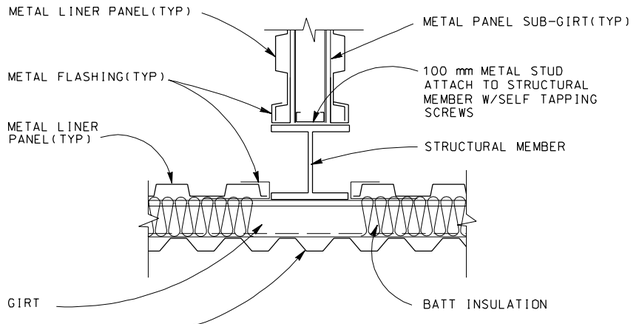

DETAIL 1 A-06 AX-0 2

SCALE : 1 : 10

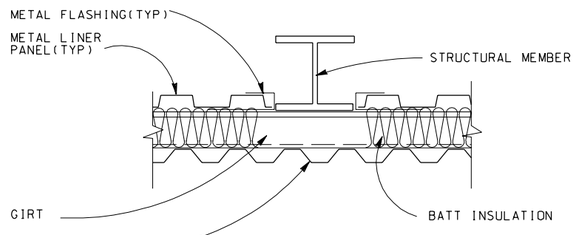

DETAIL 2 A-05 AX-0 2

SCALE : 1 : 10

GRAPHIC SCALES

1:5 100 50 0 100 200

1:10 200 100 0 200 400

US Army Corps of Engineers

Symbol	Description	Date	Approved	Symbol	Description	Date	Approved

Designed by:
Dwn by: LM
Ckd by: LM
Reviewed by: RR
Submitted by: RR
Date: 01 APR 98
Rev.
Design file no.
Drawing code: STD 171-00-01
File name: STDAX02.DGN
Plot date: 20 MAR 98
Plot scale: FULL

U.S. ARMY ENGINEERING AND SUPPORT CENTER, HUNTSVILLE
HUNTSVILLE, ALABAMA

FORCE XXI/FORCE MODERNIZATION PROGRAM
STANDARD DESIGN

STANDARD DETAILS AND NOTES
(METAL BUILDING CONSTRUCTION)

Sheet reference number:
AX-02
Sheet of