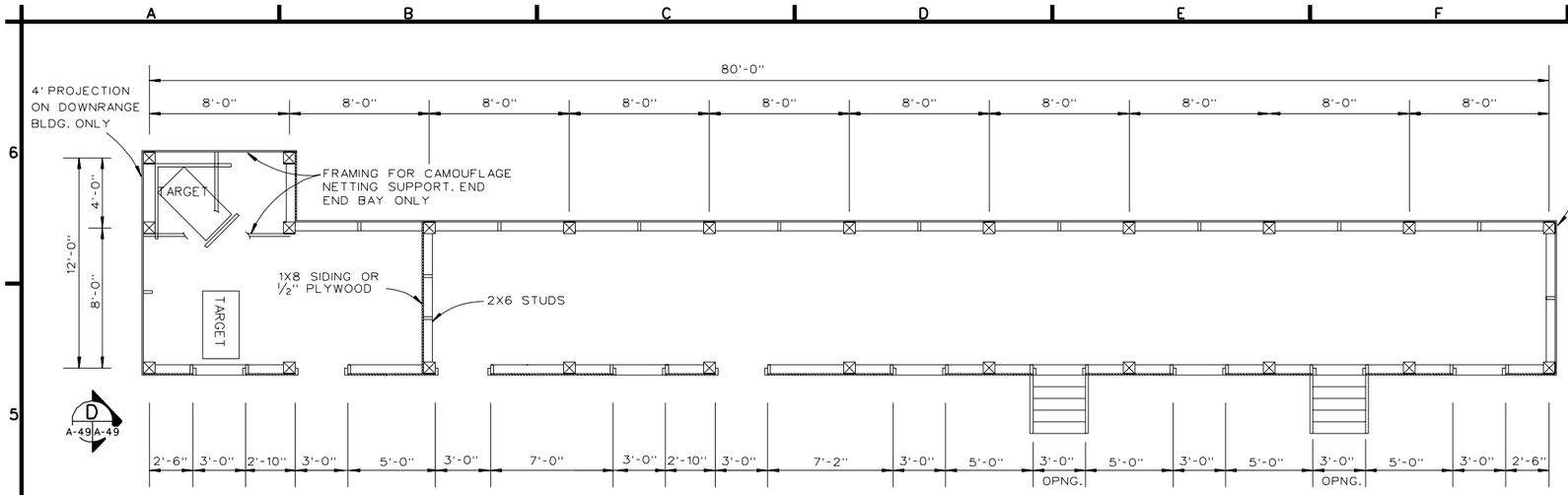

FLOOR PLAN
SCALE : 1/ 4" = 1'-0"

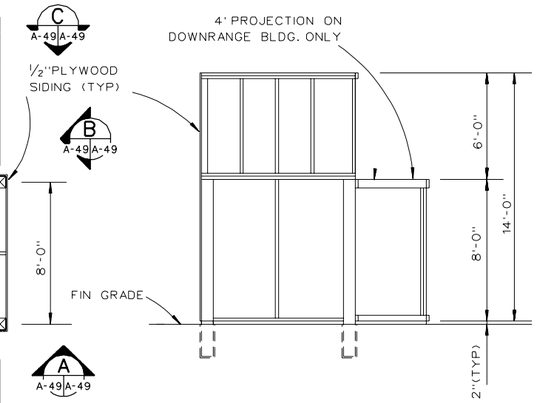

ELEVATION B A-49 A-49
SCALE : 1/ 4" = 1'-0"

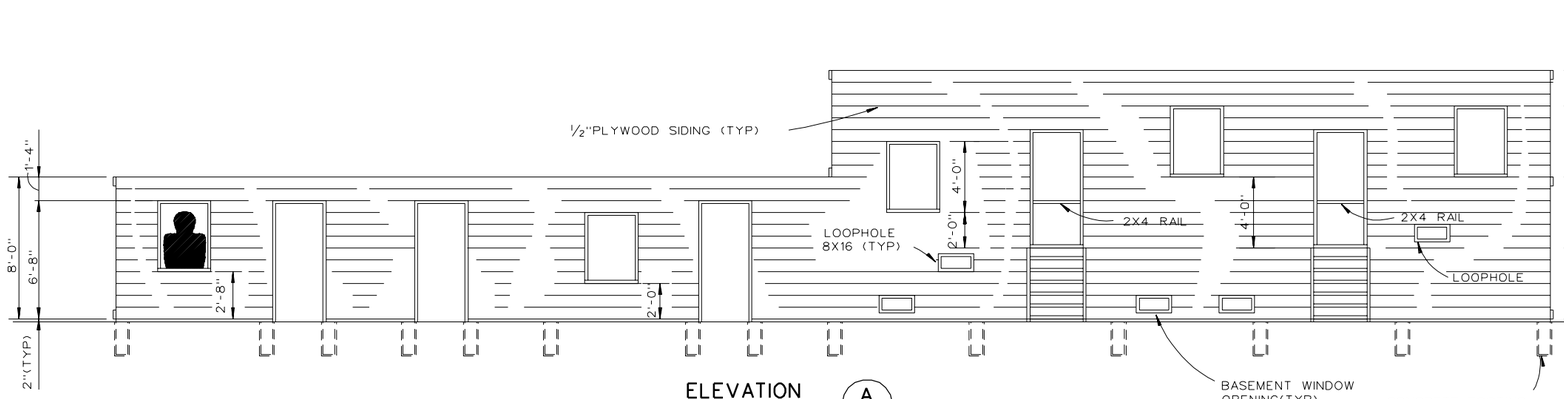

ELEVATION A A-49 A-49
SCALE : 1/ 4" = 1'-0"

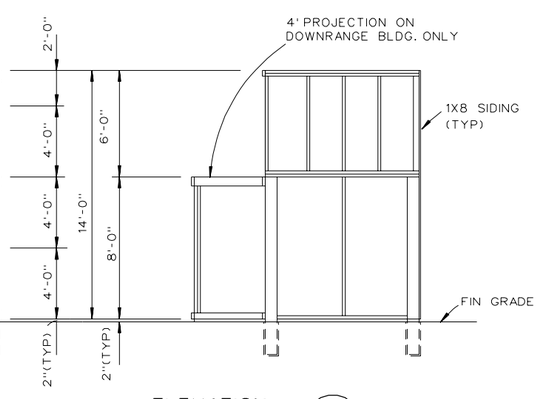

ELEVATION D A-49 A-49
SCALE : 1/ 4" = 1'-0"

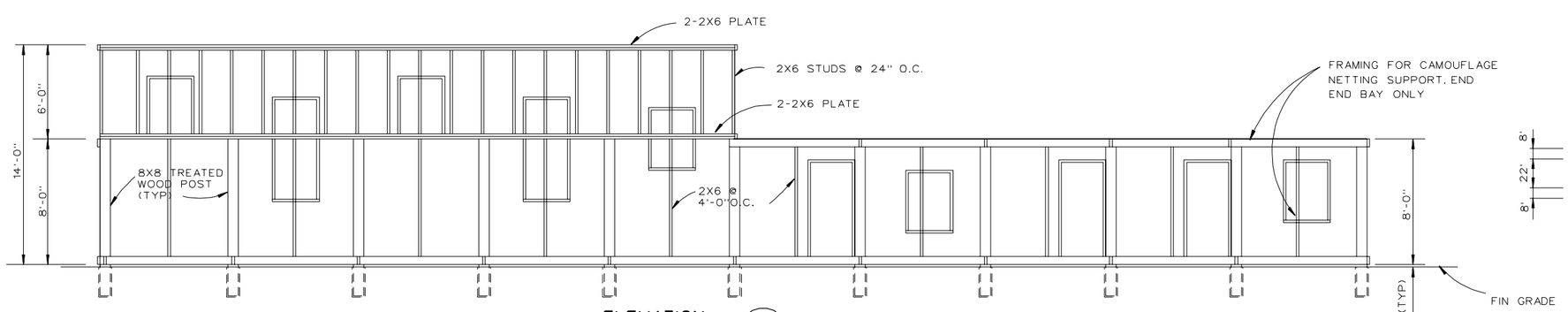

ELEVATION C A-49 A-49
SCALE : 1/ 4" = 1'-0"

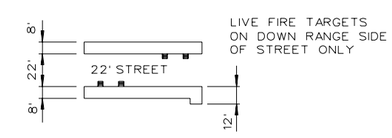

KEY PLAN

NOTE:

RICOCHET RESISTANT PROTECTIVE SHIELDING SHALL BE PROVIDED BEHIND EACH TARGET TO PROTECT THE WOOD STRUCTURE FROM DAMAGE.

GRAPHIC SCALES

¼"=1'-0" 5' 0 5'

US Army Corps of Engineers

Symbol	Description	Date	Approved	Symbol	Description	Date	Approved

Designed by: LM
Dwn by: LM
Ckd by: LM
Reviewed by: RR
Submitted by: RR
Date: 01 APR 98
Rev.
Design file no.
Drawing code: STD 179-23-01
File name: STD449.DGN
Project no. 1
Plot scale: FULL
Plot date: 14 MAR 98

U.S. ARMY ENGINEERING AND SUPPORT CENTER, HUNTSVILLE
HUNTSVILLE, ALABAMA

FORCE XXI/FORCE MODERNIZATION PROGRAM
STANDARD DESIGN

MAC
DESTINY DOORWAY

Sheet reference number:
A-49.
Sheet of