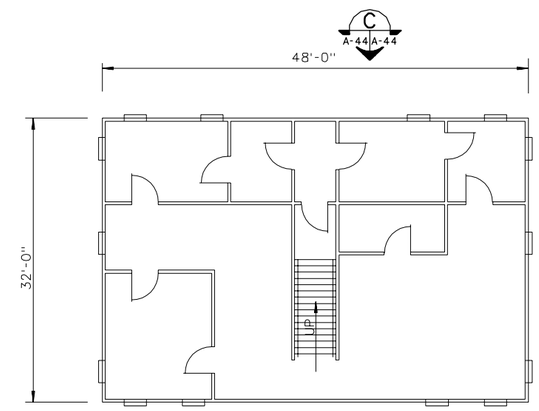

BASEMENT FLOOR PLAN
SCALE : 1/ 8" = 1'-0"

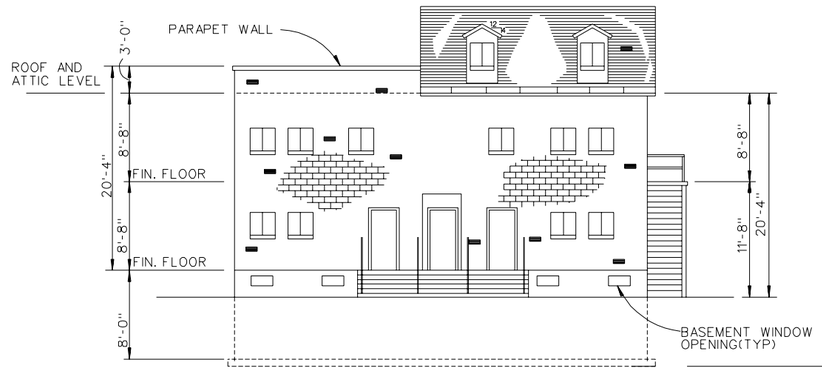

ELEVATION A A-44 A-44
SCALE : 1/ 8" = 1'-0"

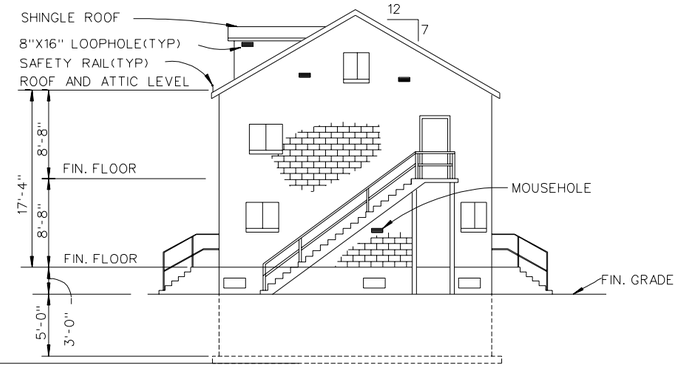

ELEVATION B A-44 A-44
SCALE : 1/ 8" = 1'-0"

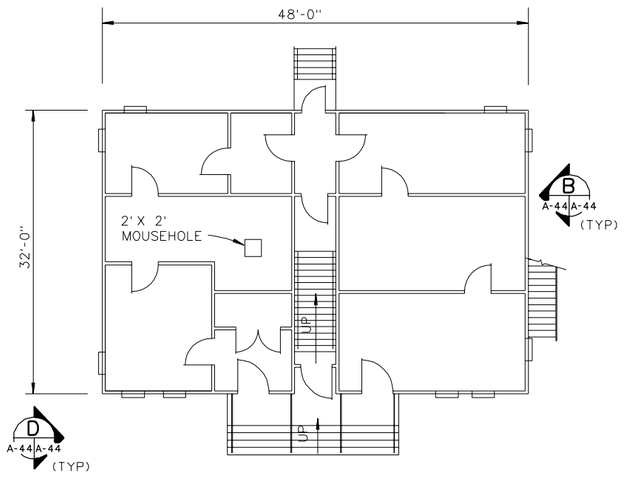

BASEMENT FLOOR PLAN
SCALE : 1/ 8" = 1'-0"

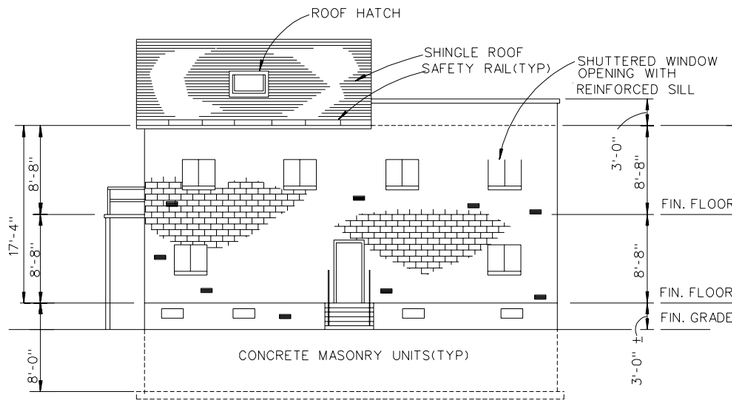

ELEVATION C A-44 A-44
SCALE : 1/ 8" = 1'-0"

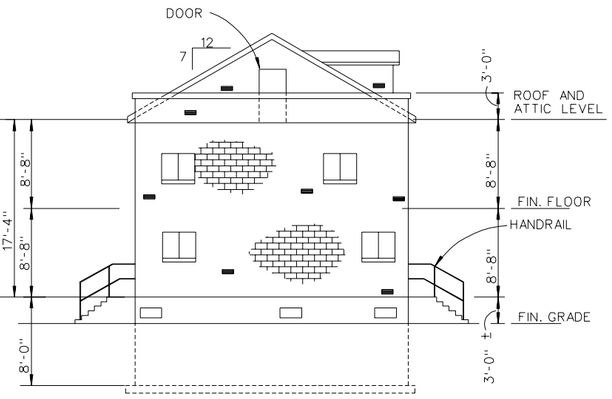

ELEVATION D A-44 A-44
SCALE : 1/ 8" = 1'-0"

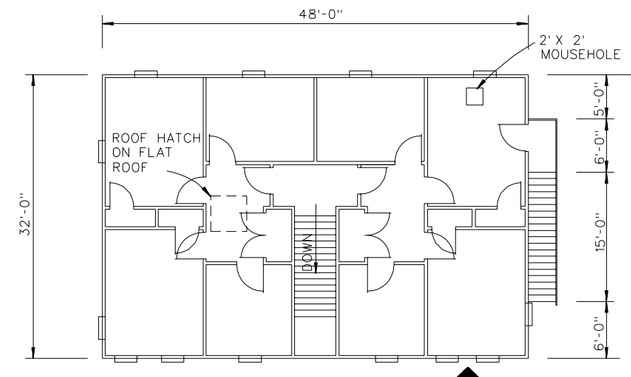

SECOND FLOOR PLAN
SCALE : 1/ 8" = 1'-0"

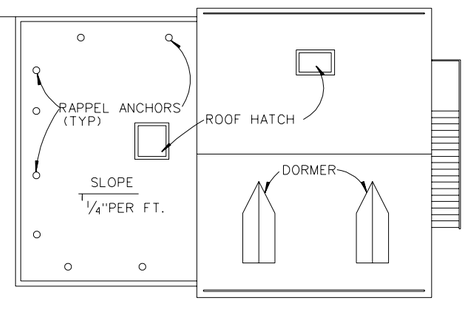

ROOF PLAN
SCALE : 1/ 8" = 1'-0"

GRAPHIC SCALES

1/8" = 1'-0"

5' 0 5' 10' 15'

US Army Corps of Engineers

Symbol	Description	Date	Approved	Symbol	Description	Date	Approved

Designed by: LM
Dwn by: LM
Ckd by: LM
Reviewed by: RR
Submitted by: RR
Date: 01 APR 98
Rev.
Design file no.
Drawing code: STD 179-23-01
File name: STD44.DGN
Plot date: 29 MAR 98
Plot scale: FULL

U.S. ARMY ENGINEERING AND SUPPORT CENTER, HUNTSVILLE
HUNTSVILLE, ALABAMA

FORCE XXI/FORCE MODERNIZATION PROGRAM
STANDARD DESIGN

MAC
URBAN DEFENSE BUILDING

Sheet reference number:
A-44.
Sheet of