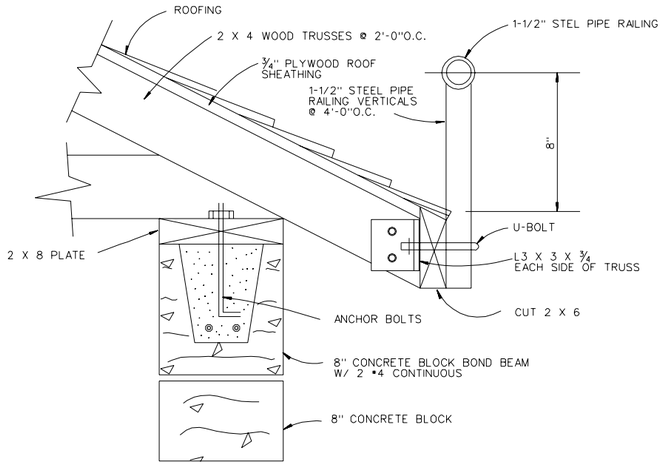

GABLE ANCHOR DETAIL

SCALE : 3" = 1'-0"

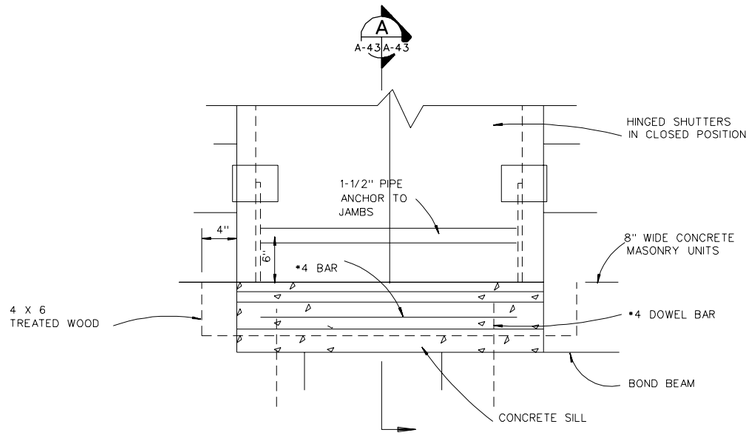

REINFORCED SILL ELEVATION DETAIL

SCALE : 3" = 1'-0"

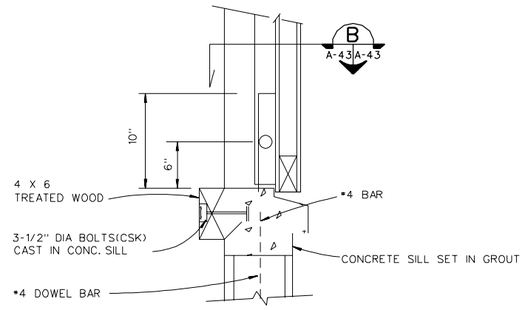

SECTION

SCALE : 1:50

A A-43 A-43

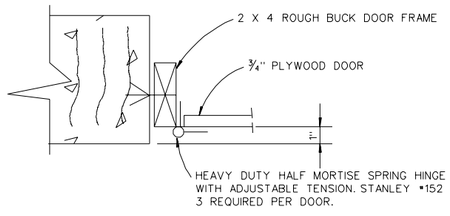

TYPICAL INTERIOR DOOR JAMB DETAIL

SCALE : 3" = 1'-0"

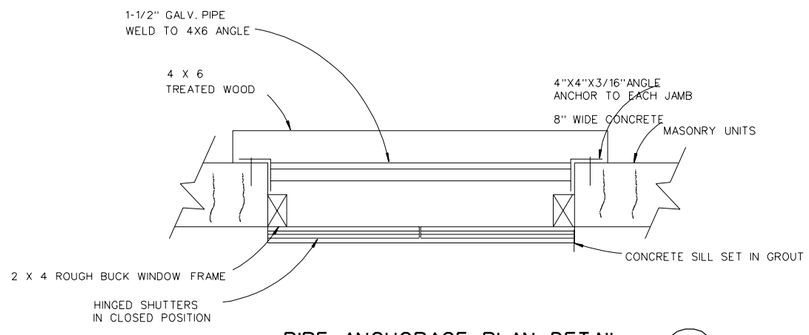

PIPE ANCHORAGE PLAN DETAIL

SCALE : 1-1/ 2"=1'-0"

B A-43 A-43

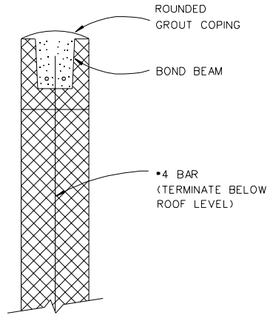

TYPICAL PARAPET DETAIL

SCALE : 1-1/ 2"=1'-0"

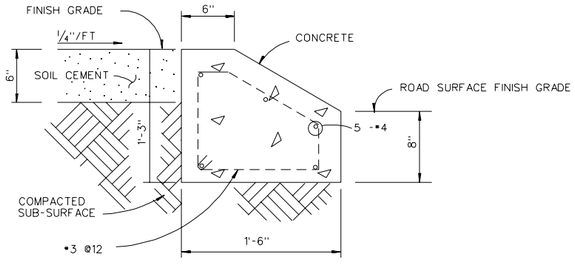

MOUNTABLE CURB DETAIL

SCALE : 1-1/ 2"=1'-0"

GRAPHIC SCALES

3"=1'-0" 12 9 6 3 0

1-1/2 = 1 0 12 9 6 3 0 1

US Army Corps of Engineers

Symbol	Description	Date	Approved	Symbol	Description	Date	Approved

Designed by: Dwn by: LM Ckd by: LM Reviewed by: RR Submitted by: RR

Date: 01 APR 98 Design file no. Drawing code: STD 179-23-01 File name: STD443.DGN Plot date: 20 JANUARY 98 Plot scale: FULL

Rev.

U. S. ARMY ENGINEERING AND SUPPORT CENTER, HUNTSVILLE HUNTSVILLE, ALABAMA

FORCE XXI/FORCE MODERNIZATION PROGRAM STANDARD DESIGN

MOUT BUILDING DETAILS

Sheet reference number: A- 43

Sheet of