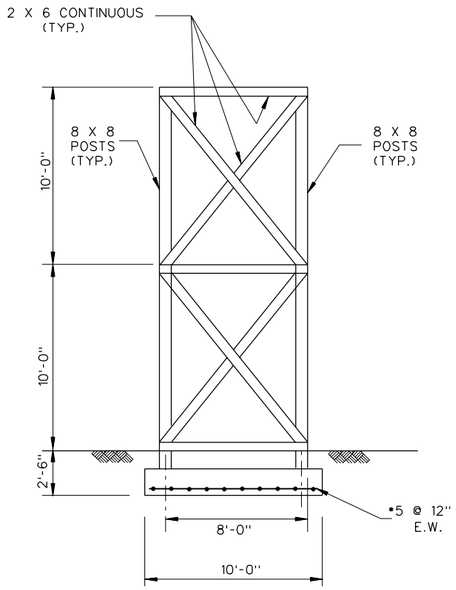

NOTE: USE 2 - 1/2" x 4" LAG BOLTS @ EACH JOINT

BRACED BENT & FOOTING VIEW (G) A-21 A-22

SCALE : 1/4" = 1'-0"

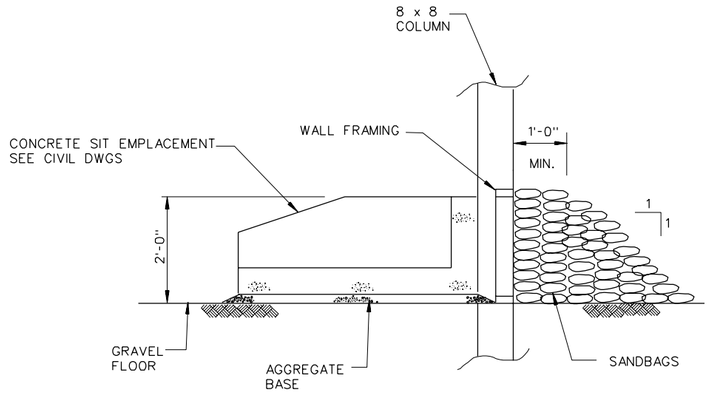

SECTION (F) A-21 A-22

SCALE : 3/4" = 1'-0"

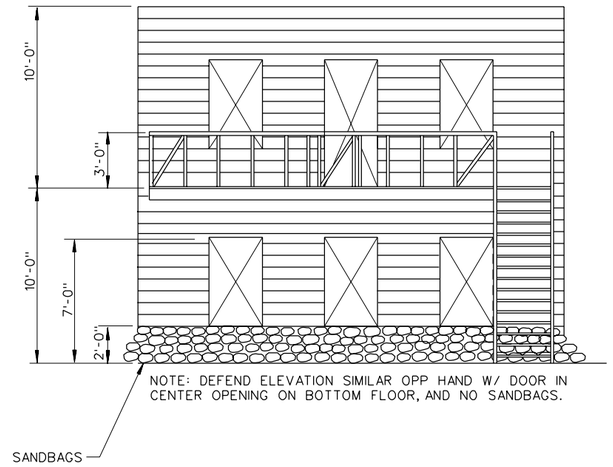

NOTE: DEFEND ELEVATION SIMILAR OPP HAND W/ DOOR IN CENTER OPENING ON BOTTOM FLOOR, AND NO SANDBAGS.

ASSAULT SIDE ELEVATION (A) A-21 A-22

SCALE : 1/4" = 1'-0"

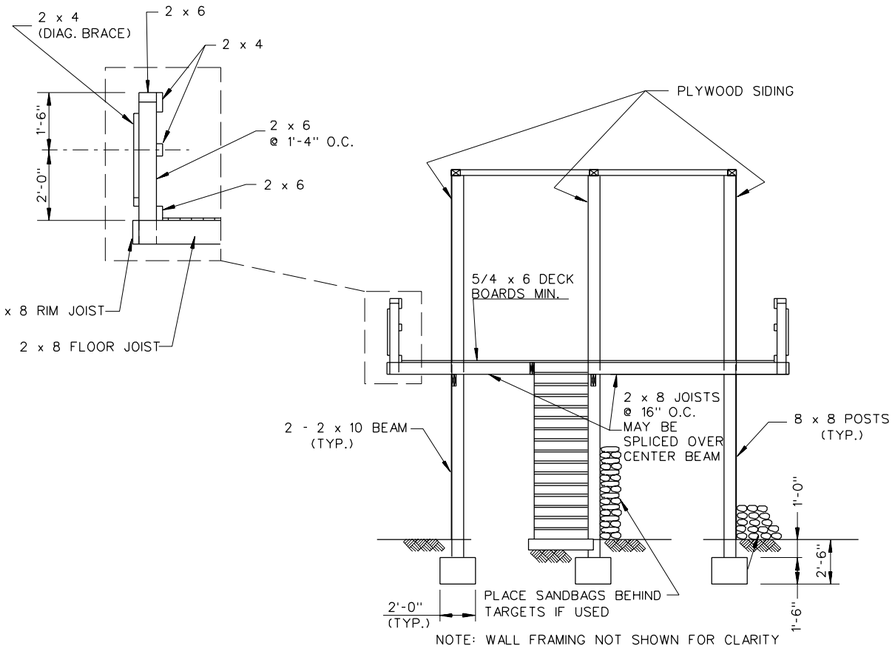

NOTE: WALL FRAMING NOT SHOWN FOR CLARITY

SECTION (D) A-21 A-22

SCALE : 1/4" = 1'-0"

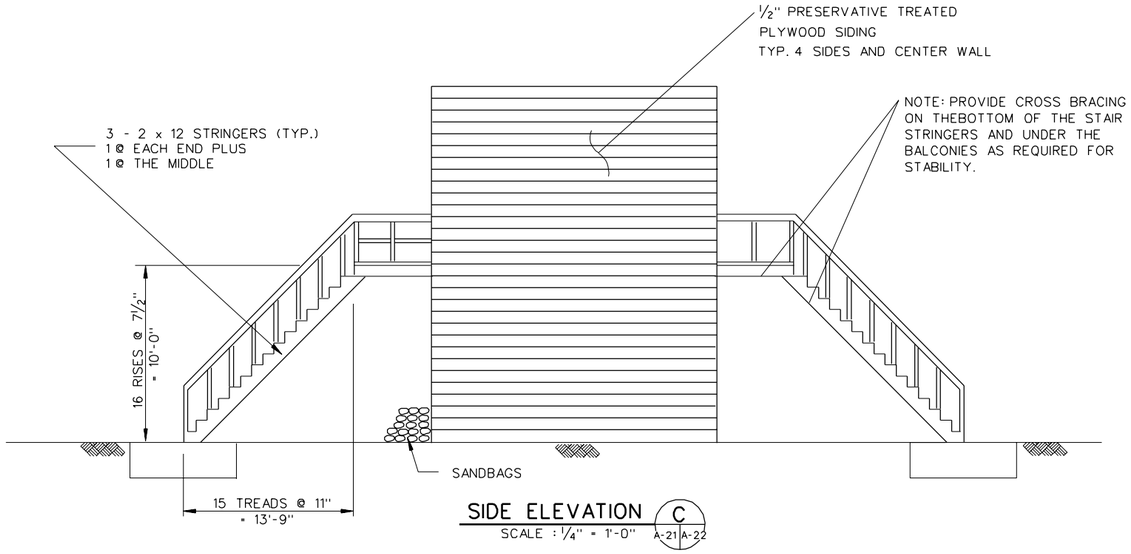

SIDE ELEVATION (C) A-21 A-22

SCALE : 1/4" = 1'-0"

NOTE: 2 - 2 x 6 TREADS.
NO RISER BOARDS REQUIRED.
DIMENSIONS TYPICAL ALL STAIRS.

GRAPHIC SCALES:

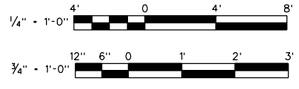

US Army Corps of Engineers

Symbol	Description	Date	Approved	Symbol	Description	Date	Approved

Designed by: REH
Dwn by: LM
Ckd by: LM
Reviewed by: RR
Submitted by: RR
Date: 01 APR 98
Design file no.
Drawing code: STD 179-90-01
File name: STD.A22.DGN
Plot date: 20 MAR 98
Plot scale: FULL
Rev.

U.S. ARMY ENGINEERING AND SUPPORT CENTER, HUNTSVILLE
HUNTSVILLE, ALABAMA

FORCE XXI/FORCE MODERNIZATION PROGRAM
STANDARD DESIGN

ASSAULT/DEFEND HOUSE (2 OF 2)

Sheet reference number:
A-22
Sheet of