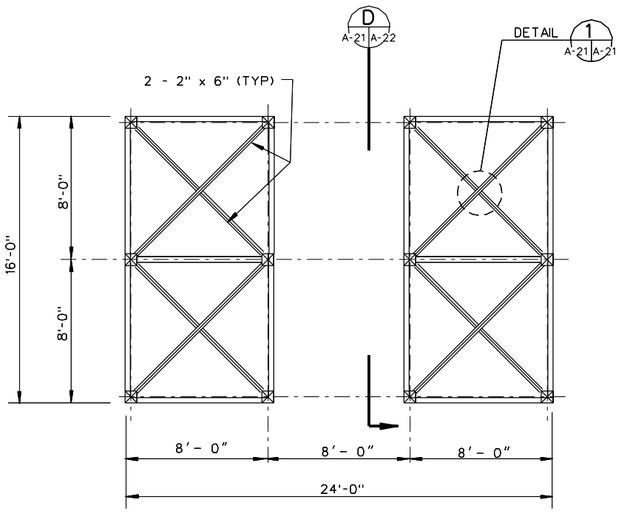

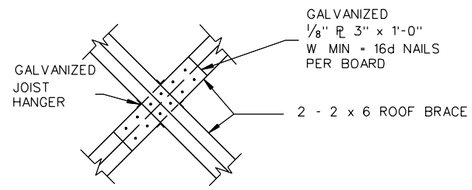

DETAIL 1 A-21 A-21
SCALE : 1½"=1'-0"

ROOF FRAMING PLAN
SCALE : ¼"=1'-0"

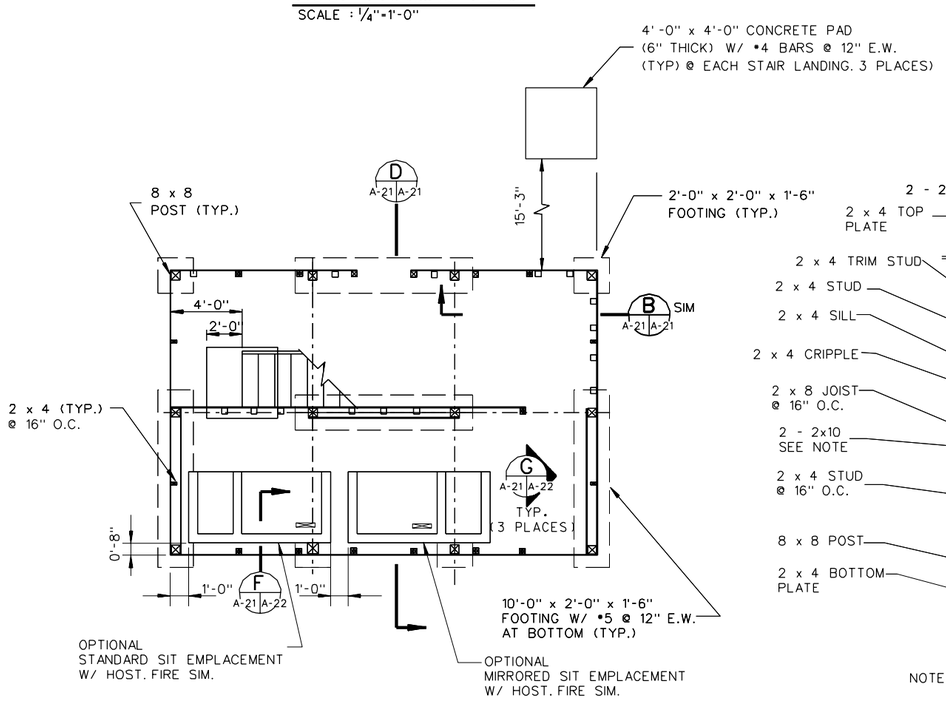

FOUNDATION/FIRST FLOOR PLAN
SCALE : ¼"=1'-0"

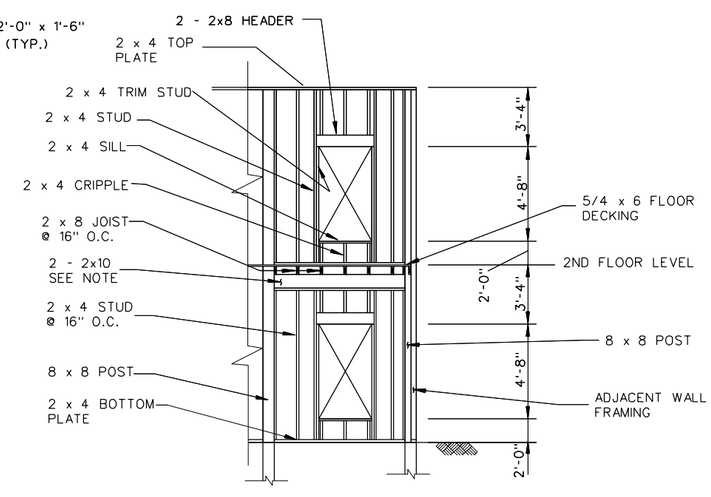

NOTE: 2 - 2x10 BEAM SPANS BETWEEN 8x8 POSTS WITH A JOIST HANGAR AT EACH END. THE BEAM SUPPORTS THE SECOND FLOOR WALL AND DOES NOT BEAR ON FIRST FLOOR WALL FRAMING. THIS ALLOWS WALL SECTIONS TO BE REPLACED WHEN SHOT-UP.

SECTION B A-21 A-21
SCALE : ¼" = 1'-0"

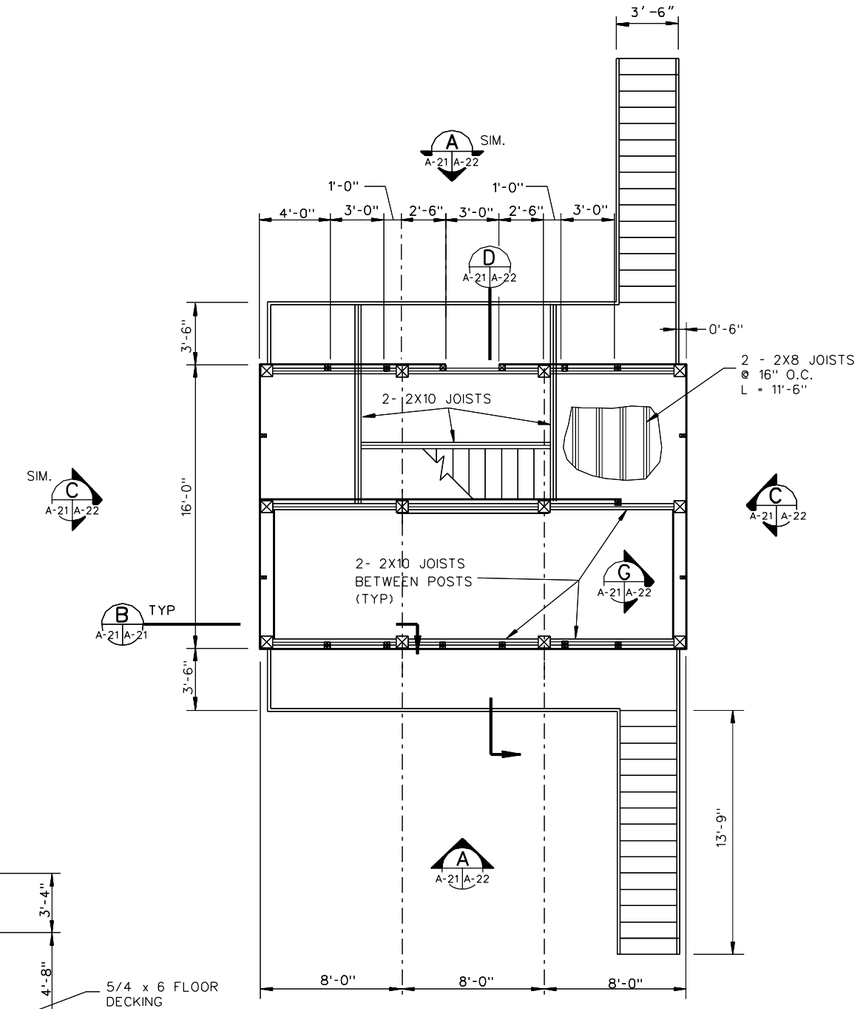

SECOND FLOOR PLAN
SCALE : ¼"=1'-0"

GRAPHIC SCALES:

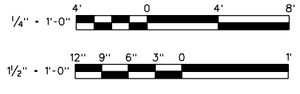

US Army Corps of Engineers

Symbol	Description	Date	Approved	Symbol	Description	Date	Approved

Designed by: REH
Dwn by: LM
Ckd by: LM
Reviewed by: RR
Submitted by: RR
Date: 01 APR 98
Design file no.
Drawing code: STD 179-90-01
File name: STDA21.DGN
Plot date: 20 MAR 98
Plot scale: FULL
Rev.

U.S. ARMY ENGINEERING AND SUPPORT CENTER, HUNTSVILLE
HUNTSVILLE, ALABAMA

FORCE XXI/FORCE MODERNIZATION PROGRAM
STANDARD DESIGN

ASSAULT/DEFEND HOUSE (1 OF 2)

Sheet reference number:
A-21
Sheet of