NOTES:

1. SEE STRUCTURAL DWG. FOR ADDITIONAL REQUIREMENTS AND DETAILS.
2. SEE CIVIL DWG. FOR BUILDING ORIENTATION.

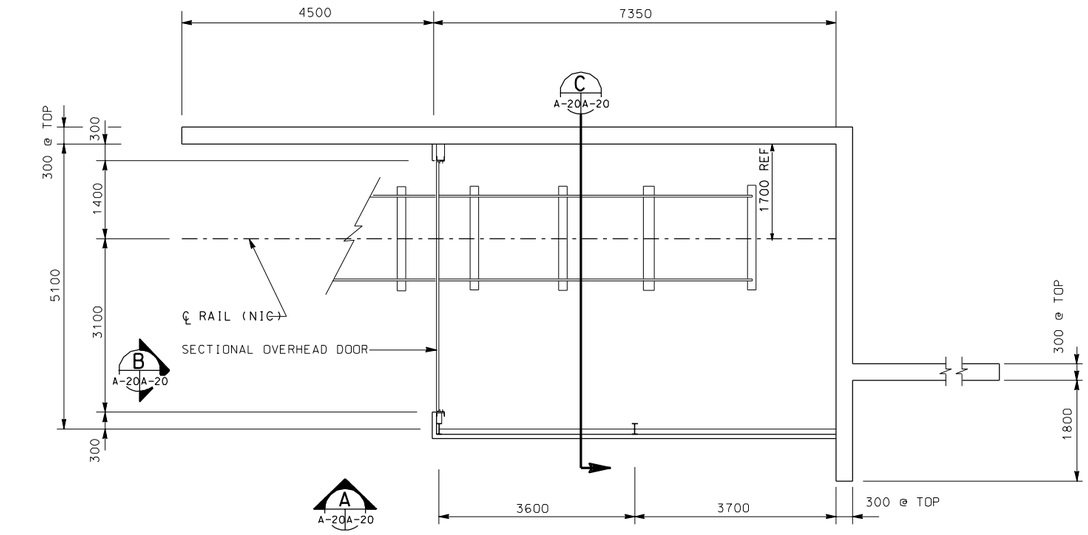

PLAN

SCALE 1 : 50

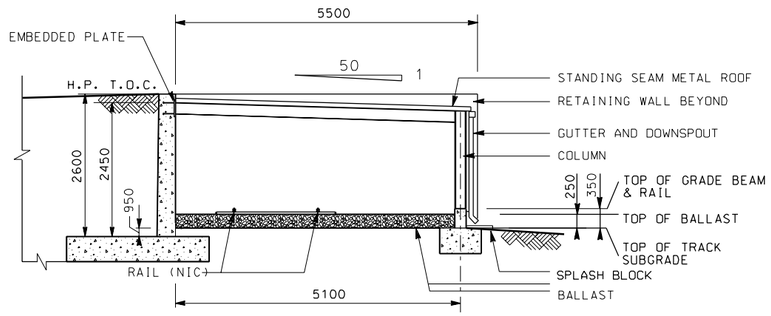

SECTION C A-20A-20

SCALE : 1 : 50

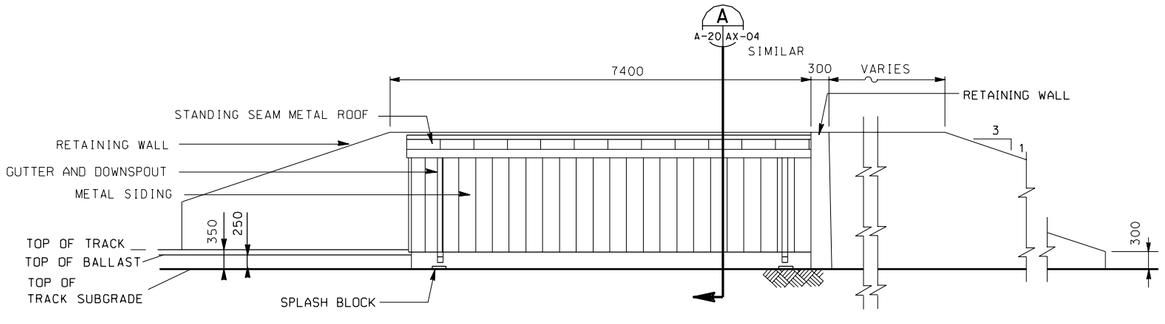

ELEVATION A A-20A-20

SCALE : 1 : 50

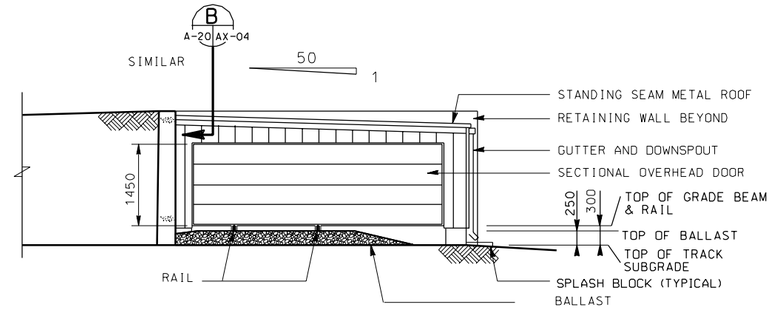

ELEVATION B A-20A-20

SCALE : 1 : 50

GRAPHIC SCALES

1:50 1000 500 0 1000 2000

US Army Corps of Engineers

Symbol	Description	Date	Approved	Symbol	Description	Date	Approved

Designed by: Dwn by: LM Ckd by: LM Reviewed by: RR Submitted by: RR

Date: 01 APR 98 Design file no. Drawing code: STD 171-90-01 File name: STD4D.DGN Plot date: 20 MAR 98 Plot scale: FULL Rev.

U.S. ARMY ENGINEERING AND SUPPORT CENTER, HUNTSVILLE
HUNTSVILLE, ALABAMA

FORCE XXI/FORCE MODERNIZATION PROGRAM
STANDARD DESIGN

AMTC SHELTER
PLAN AND ELEVATIONS

Sheet reference number:
A-20

Sheet of