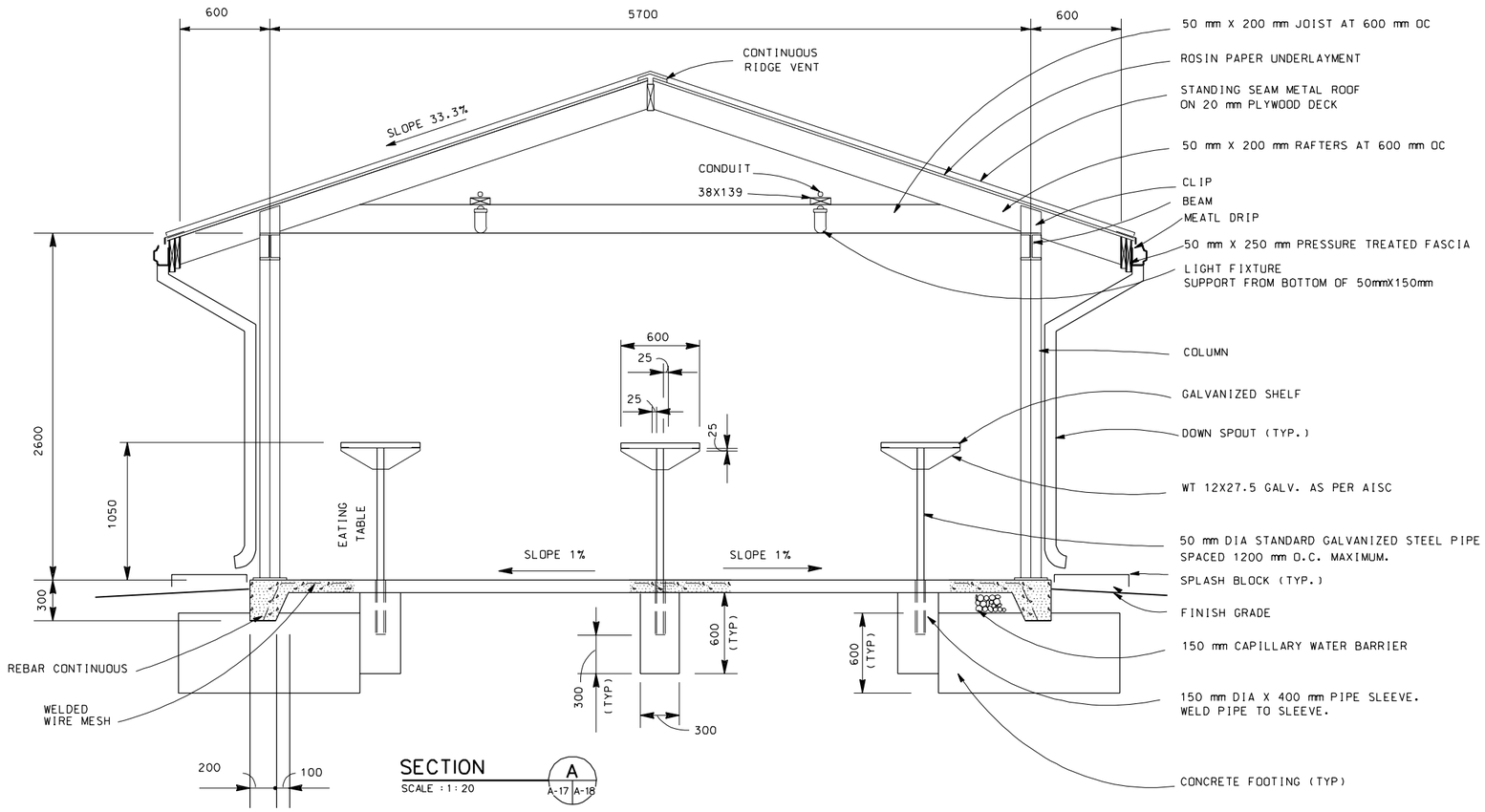

SECTION A
SCALE : 1 : 20
A-17 A-18

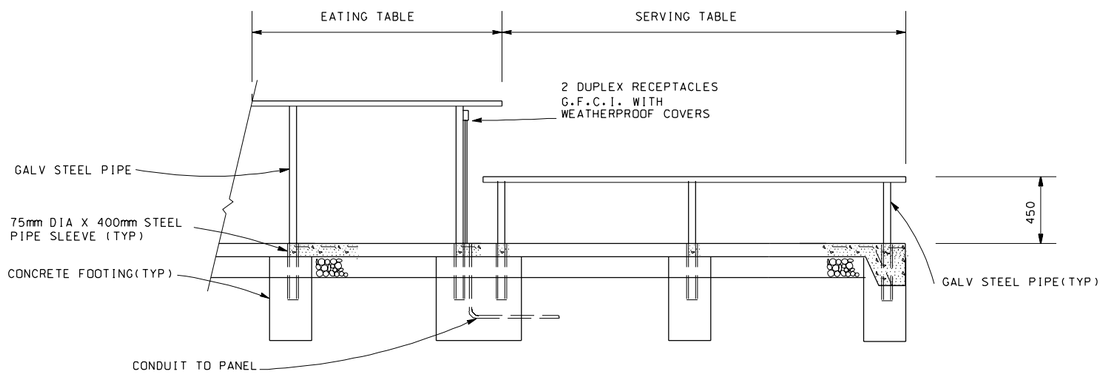

SECTION B
SCALE : 1 : 20
A-17 A-18

NOTES

1. ALL DIMENSIONS ARE IN MILLIMETERS UNLESS OTHERWISE NOTED.
2. SEE SHEET STRUCTURAL DRAWING "STANDARD FRAMING DETAILS" FOR ADDITIONAL INFORMATION.
3. SEE CIVIL DRAWINGS FOR FINISH FLOOR AND FINISH GRADE ELEVATIONS.
4. PAINT CONDUIT AND ASSOCIATED ELECTRICAL EQUIPMENT TO MATCH THE ADJACENT STRUCTURE.

GRAPHIC SCALES

1:20 1000 500 0 1000 2000

US Army Corps of Engineers

Symbol	Description	Date	Approved	Symbol	Description	Date	Approved

Designed by: LM
Dwn by: LM
Ckd by: LM
Reviewed by: RR
Submitted by: RR
Date: 01 APR 98
Rev.
Design file no.
Drawing code: STD 171-90-01
File name: STDA18.DGN
Plot date: 20 JANUARY 98
Plot scale: FULL

U.S. ARMY ENGINEERING AND SUPPORT CENTER, HUNTSVILLE
HUNTSVILLE, ALABAMA

FORCE XXI/FORCE MODERNIZATION PROGRAM
STANDARD DESIGN
COVERED MESS (2 OF 2)
(USED WITH MASONRY CONSTRUCTION)

Sheet reference number:
A -18
Sheet of