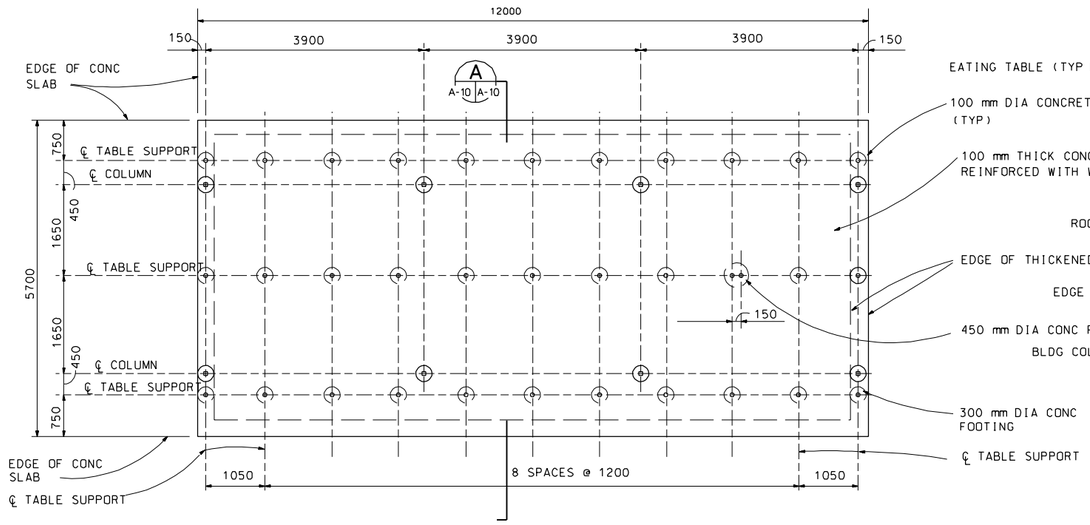

FOUNDATION PLAN

SCALE 1 : 20

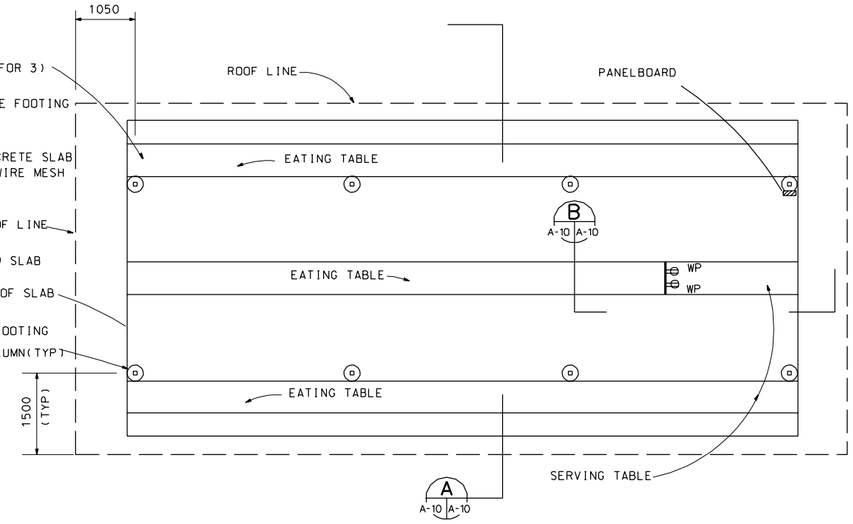

FLOOR PLAN AND ELECTRICAL PLAN

SCALE 1 : 20

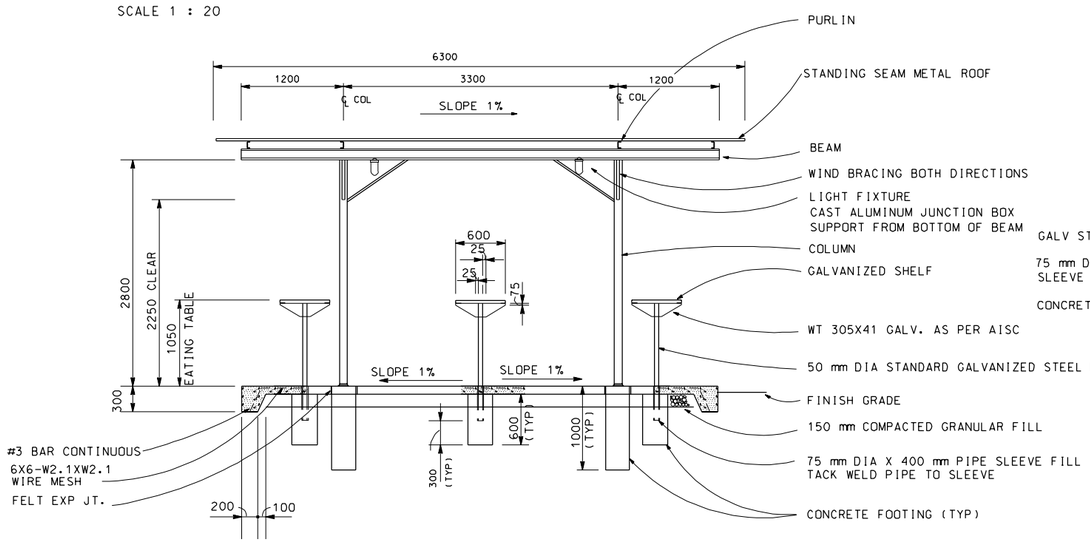

SECTION A

SCALE : 1 : 30

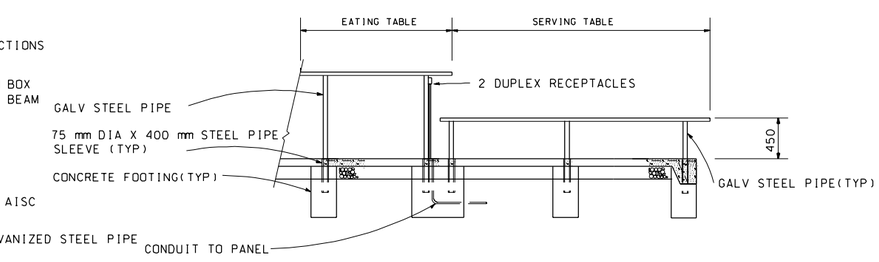

SECTION B

SCALE : 1 : 30

NOTES:

1. THIS TABLE IS BASED ON ONE SERVING TABLE AS INDICATED BY THE TABLE SUPPORT FOOTINGS SHOWN ON THE FOUNDATION PLAN. IF MORE SERVE TABLES ARE REQUIRED THE FOUNDATION PLAN MUST BE REVISED.
2. ALL DIMENSIONS ARE IN MILLIMETERS UNLESS OTHERWISE LABELED.
3. THE STRUCTURE SHALL BE DESIGNED AND FABRICATED ACCORDING TO THE METAL BUILDING MANUFACTURING ASSOCIATION (MBMA) SPECIFICATIONS.

GRAPHIC SCALES

1:20 — 400 200 0 400 800

1:30 — 600 300 0 600 1200

US Army Corps of Engineers

Symbol	Description	Date	Approved	Symbol	Description	Date	Approved

Designed by: LM
Dwn by: LM
Ckd by: LM
Reviewed by: RR
Submitted by: RR
Date: 01 APR 98
Rev.
Design file no.
Drawing code: STD 171-90-01
File name: STDA10.DGN
Plot date: 31 MAR 98
Plot scale: FULL

U.S. ARMY ENGINEERING AND SUPPORT CENTER, HUNTSVILLE
HUNTSVILLE, ALABAMA

FORCE XXI/FORCE MODERNIZATION PROGRAM
STANDARD DESIGN
COVERED MESS
(METAL BUILDING CONSTRUCTION)

Sheet reference number:
A-10
Sheet of