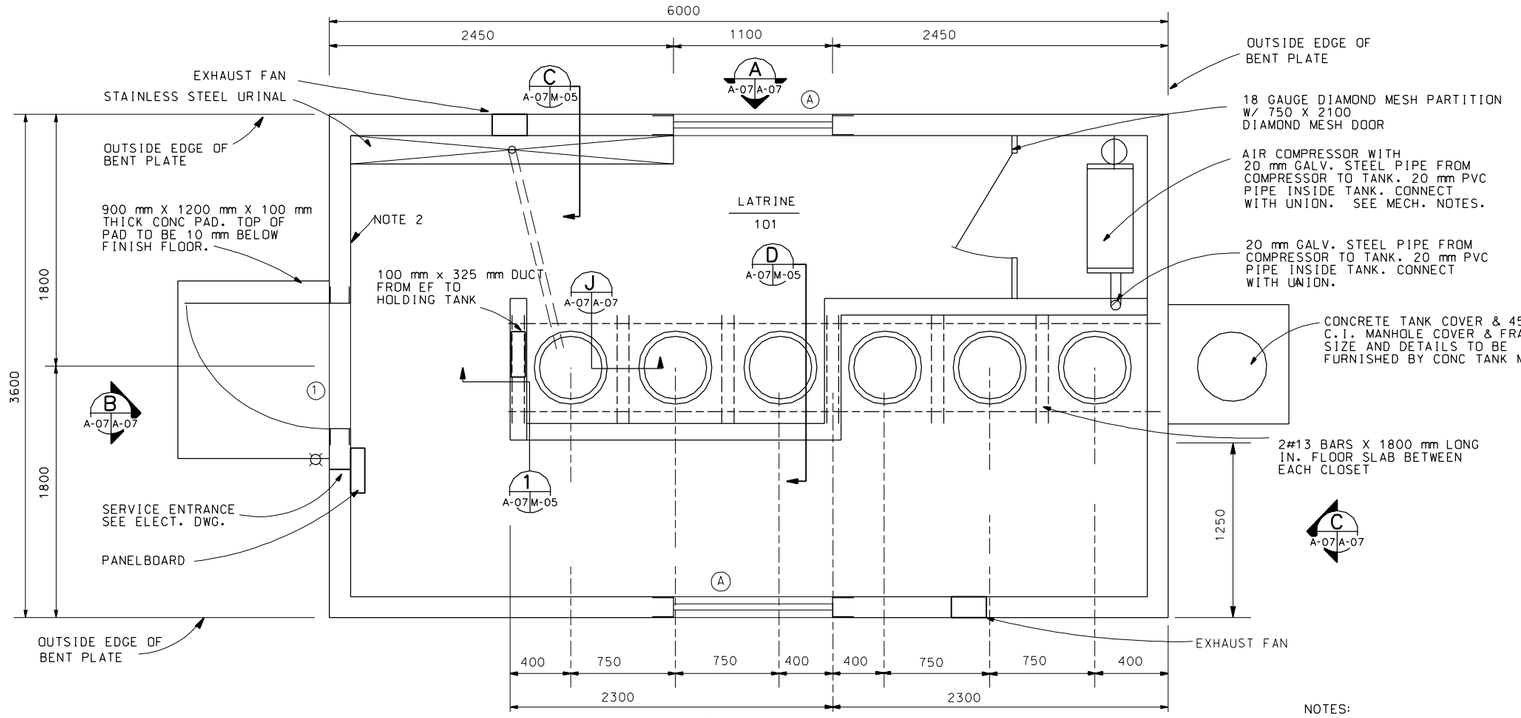

PLAN
SCALE 1 : 20

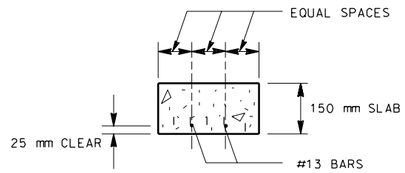

SECTION
SCALE : NTS

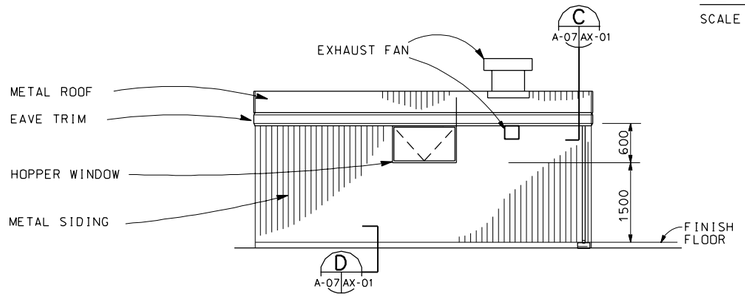

ELEVATION
SCALE : 1:50

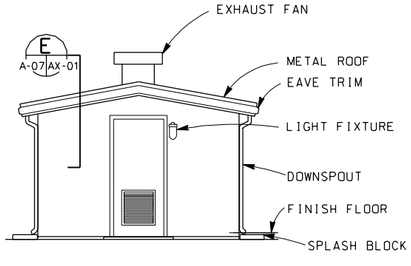

ELEVATION
SCALE : 1:50

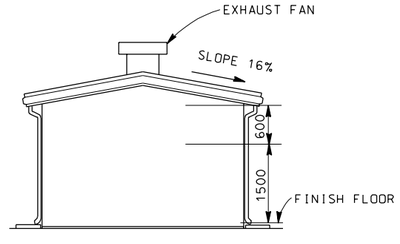

ELEVATION
SCALE : 1:50

NOTES:

1. VAULT CLOSET SHALL BE STAINLESS STEEL DESIGNED TO FIT THROUGH A 150mm CONCRETE SLAB. TOILET SHALL BE CONSTRUCTED WITH A 24-GAUGE BODY, 18-GAUGE BRACKET FOR TOILET SEAT MOUNTING, AND 18-GAUGE FLANGE ABOVE CONCRETE SLAB AND A 24-GAUGE EXTENSION BELOW CONCRETE FLOOR. 18mm HOLES SHALL BE DRILLED IN MOUNTING FLANGE FOR ANCHORING TO CONCRETE. STAINLESS STEEL SHALL BE TYPE 304 WITH NATURAL FINISH. TOILET SHALL BE CAPABLE OF SUPPORTING 300 POUNDS. ALL SEAMS SHALL BE PIPE LOCK EXCEPT FOR FLANGES, WHICH SHALL BE TACK WELDED. HEIGHT FROM FLOOR TO SEAT SHALL BE APPROXIMATELY 360mm. SEAT SHALL BE WHITE PLASTIC COATED STEEL, SPLIT STYLE, WITH STAINLESS STEEL HINGE BRACKET AND PIN.
2. PROVIDE SIGN "DISPOSAL OF CHEMICALS OR FOREIGN SUBSTANCES IN THE HOLDING TANK IS PROHIBITED".
3. ALL DIMENSIONS ARE IN MILIMETERS UNLESS OTHERWISE LABELED.

ROOM FINISH SCHEDULE

ROOM	FLOOR	BASE	WALLS	CEILING	REMARKS
101	CONC W/SEALER	METAL	STD LINER PANEL	MANUF STD CLG PANEL FINISH	

DOOR AND WINDOW SCHEDULE

ITEM	SYMBOL	SIZE	MATERIAL	GLAZING	HDW	REMARKS
DOOR	T	900 X 2100 X 44	METAL,INSUL.	NONE	1	LOUVER
WINDOW	A	1000 WIDE X 600 HIGH	METAL	POLYCARB.		HOPPER
				TRANSLUCENT		

GRAPHIC SCALES

1:50 — 1000 500 0 1000 2000

1:20 — 400 200 0 400 800

US Army Corps of Engineers

Symbol	Description	Date	Approved	Symbol	Description	Date	Approved

Designed by: Date: 01 APR 98 Rev.
Dwn by: LM Ckd by: LM Design file no.
Reviewed by: RR Submitted by: RR
Drawing code: STD 171-24-01
File name: STD409.DGN
Plot date: 20 MAR 98
Plot scale: FULL

U. S. ARMY ENGINEERING AND SUPPORT CENTER, HUNTSVILLE
HUNTSVILLE, ALABAMA

FORCE XXI/FORCE MODERNIZATION PROGRAM
STANDARD DESIGN
SINGLE-SEX LATRINE
(METAL BUILDING CONSTRUCTION)

Sheet reference number:
A -07
Sheet of