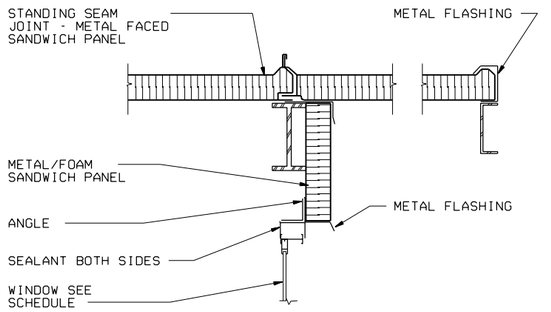

HEAD

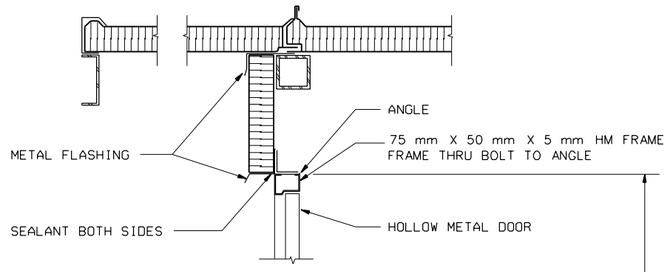

HEAD

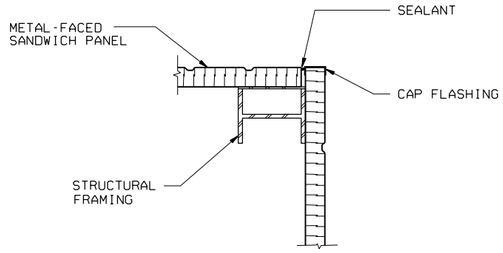

WALL PANEL AT CORNER COLUMN

DETAIL 1 A-02 A-04
SCALE : 1 : 10

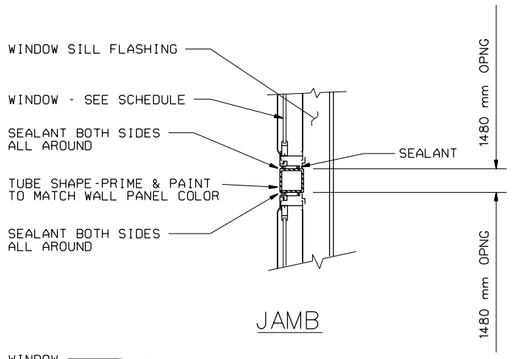

JAMB

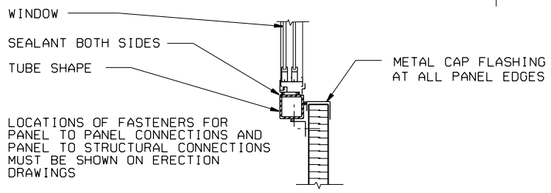

JAMB

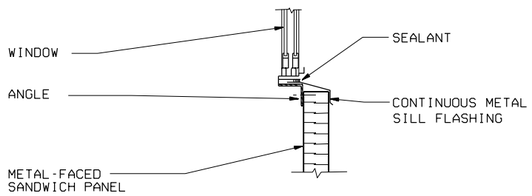

SILL

WINDOW DETAILS

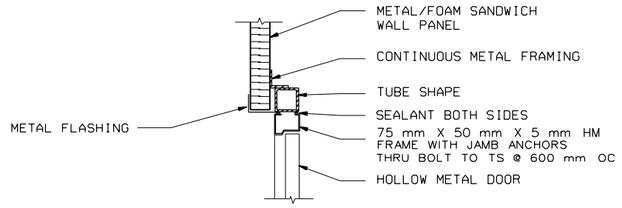

JAMB

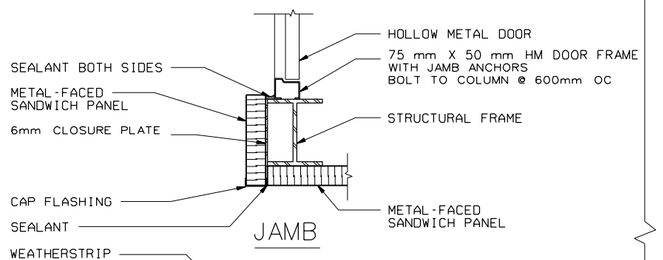

JAMB

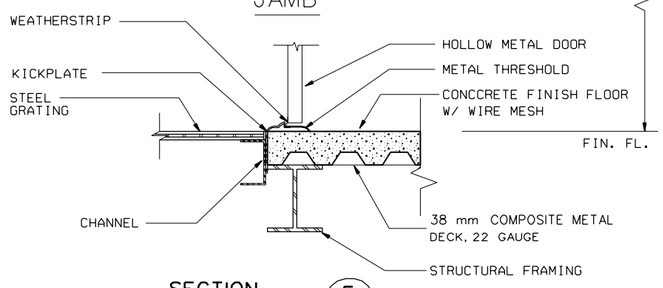

SECTION F A-02 A-04
SCALE : 1 : 10

DOOR DETAILS

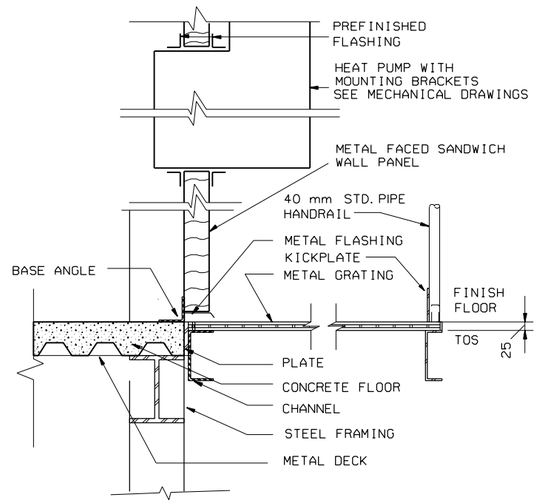

SECTION E A-02 A-04
SCALE : 1 : 10

NOTES

1. ALL DIMENSIONS ARE IN MILLIMETERS UNLESS OTHERWISE LABELED.

GRAPHIC SCALES

1:10 200 100 0 200 400

US Army Corps of Engineers

Symbol	Description	Date	Approved	Symbol	Description	Date	Approved

Designed by: Date: 01 APR 98 Rev.
Dwn by: LM Ckd by: LM Design file no.
Reviewed by: RR Drawing code: STD 179-71-01
Submitted by: RR File name: STD4DA.DGN Plot date: 20 MAR 98 Plot scale: FULL

U.S. ARMY ENGINEERING AND SUPPORT CENTER, HUNTSVILLE
HUNTSVILLE, ALABAMA

FORCE XXI/FORCE MODERNIZATION PROGRAM
STANDARD DESIGN
CONTROL TOWER (3 OF 3)
SECTIONS AND DETAILS

Sheet reference number:
A- 04
Sheet of