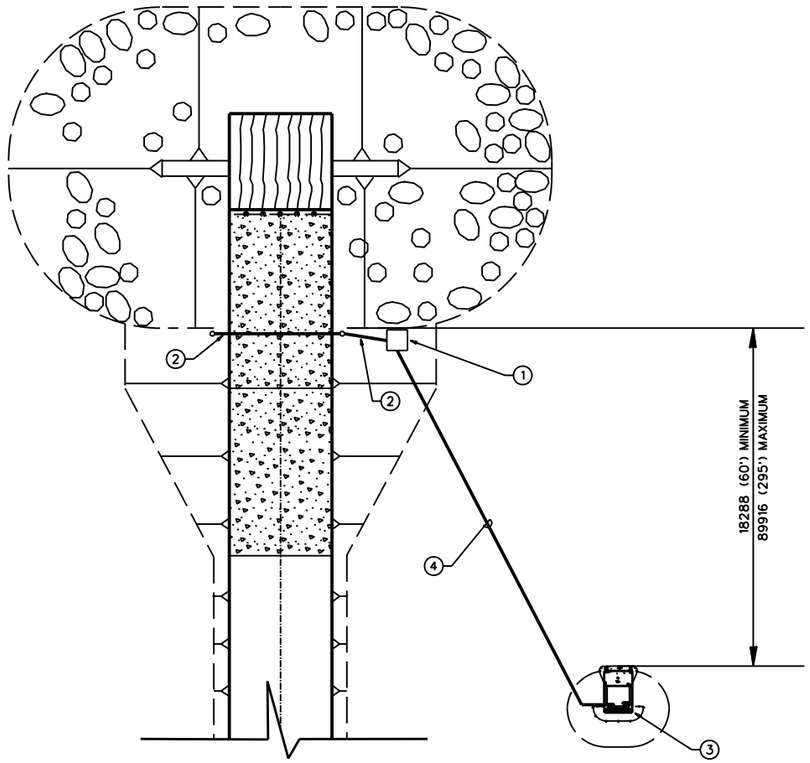

DEFILADE
SCALE: N.T.S.

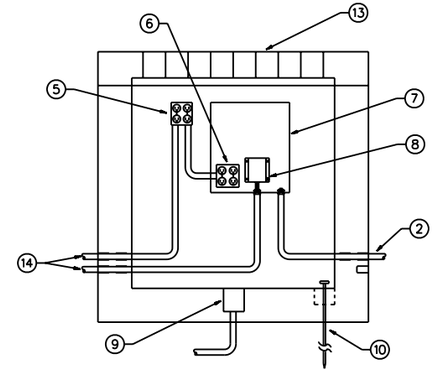

HANDHOLE INTERIOR PROFILE
SCALE: N.T.S.

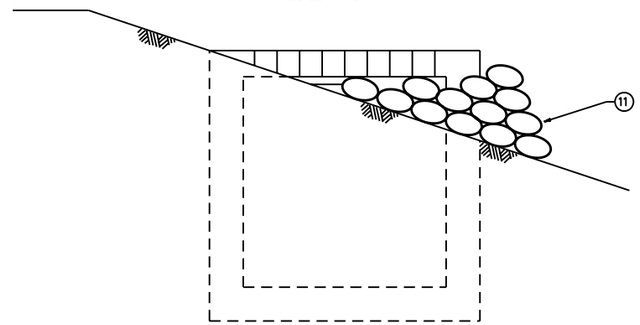

HANDHOLE EXTERIOR PROFILE
SCALE: N.T.S.

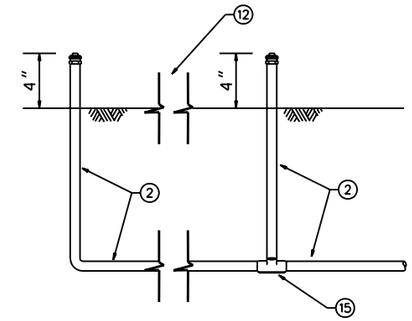

POSITION SENSOR CONDUIT MOUNTING
SCALE: N.T.S.

NOTES

1. A PRECAST 3' X 3' X 3', H20 RATED HANDHOLE. INSTALL HANDHOLE AS CLOSE AS POSSIBLE TO THE FRONT OF THE DEFILADE WITHOUT INSTALLING IT IN RIP RAP. SEE INTERIOR AND EXTERIOR PROFILE THIS SHEET.
2. 2" SCHEDULE 80 PVC CONDUIT. CAP IN HANDHOLE AND ON BOTH SIDES OF THE TANK TRIAL WHERE 4" OF CONDUIT STUBS UP ABOVE GRADE. THE LOCATION OF THESE 4" STUB-UPS SHALL BE AS CLOSE AS POSSIBLE TO THE FRONT OF THE DEFILADE WITHOUT INSTALLING THE CONDUIT IN RIP RAP. PROVIDE A PULL WIRE FROM EACH OF THE STUB UPS ABOVE GRADE TO THE HANDHOLE.
3. A TYPICAL SIT EMPLACEMENT, ONLY REQUIRED IF NO OTHER EMPLACEMENT IS LOCATED WITHIN 90000 OF THE VEHICLE POSITION SENSOR HANDHOLE. THIS EMPLACEMENT WILL SUPPLY POWER TO THE VEHICLE POSITION SENSOR EQUIPMENT AND WILL ALLOW FOR FIBER OPTIC CABLES TO BE TERMINATED AND CONVERTED TO CAT 5E OR BETTER CABLES FOR DATA SUPPLYING THE VEHICLE POSITION SENSOR. FIBER OPTIC CABLES SHALL NOT BE RUN TO THE VEHICLE POSITION SENSOR HANDHOLE AND SHALL BE TERMINATED A MINIMUM OF 18288 BEHIND THE VEHICLE POSITION SENSOR HANDHOLE.
4. DIRECT BURIED POWER CABLE SIZED BASED ON VOLTAGE DROP AND DIRECT BURIED CAT 5E SHIELDED CABLES.
5. QUAD OUTLET ON A 20 AMP CIRCUIT. OUTLET SHALL BE PROVIDED IN A WEATHER PROOF ENCLOSURE WITH COVER.
6. QUAD OUTLET INSIDE DATA ENCLOSURE.
7. 16" X 14" X 6" NEMA 4 DATA ENCLOSURE. ENCLOSURE SHALL BE HINGED ON ONE SIDE WITH LATCHES ON ON OTHER SIDES.
8. CAT5E PRIMARY PROTECTION WITH 110 BLOCK FOR INCOMING CABLE AND FEMALE RJ-45 FOR OUT GOING CABLE.
9. 6" SUMP AND DRAIN. DRAIN TO DAYLIGHT.
10. GROUND ROD AND CLAMP
11. SAND BAGS
12. TANK TRAIL
13. SINGLE HINGED ALUMINUM ACCESS DOOR. DOOR SHALL BE PROVIDED WITH A MEANS TO SECURE LID TO PREVENT JARRING FROM TANK BLAST TO LIFT LID OFF OF HANDHOLE.
14. 2" SCHEDULE 80 PVC CONDUIT. EXTEND 1524 FROM HANDHOLE.
15. 2" CONDUIT BODY TEE

US Army Corps of Engineers

Rev.	Description	Date	Approved

Designed by: Date: Rev.
Dwn by: Ckd by: Design file no.
Reviewed by: Drawing code:
Submitted by: File name: Plot scale: Plot date:

U. S. ARMY ENGINEERING AND SUPPORT CENTER, HUNTSVILLE
HUNTSVILLE, ALABAMA

30 MAY 2006

RANGE AND TRAINING LAND PROGRAM
STANDARD DESIGN MANUAL

VEHICLE POSITION SENSOR

Sheet reference number:
ED-07

Sheet of