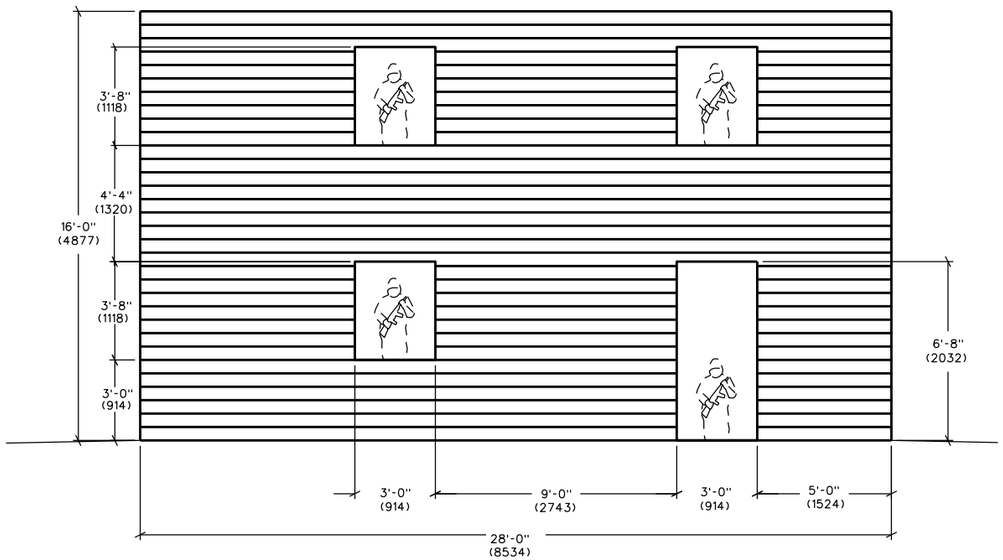

FRONT ELEVATION

SCALE : N.T.S.

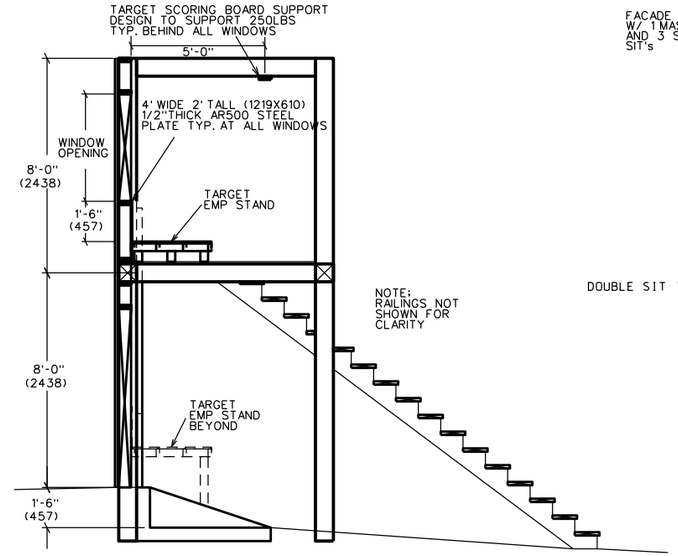

SECTION A

SCALE : N.T.S.

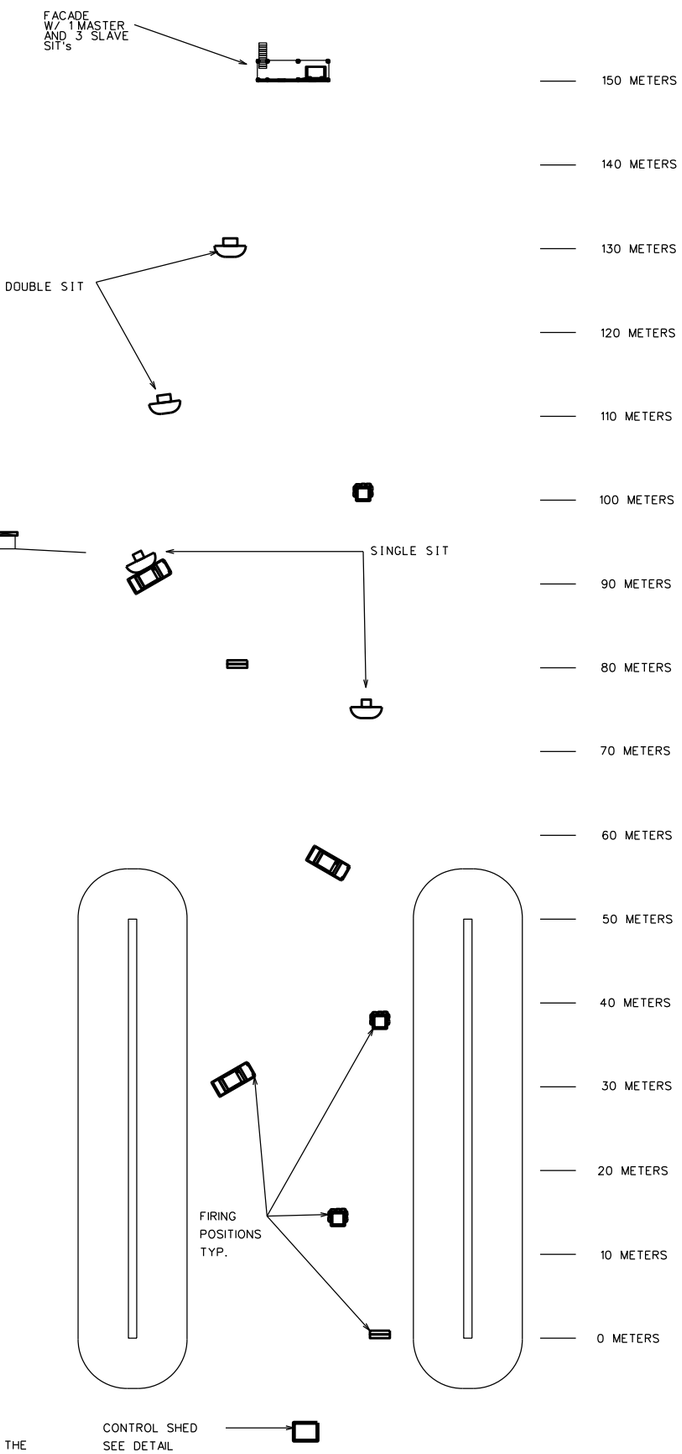

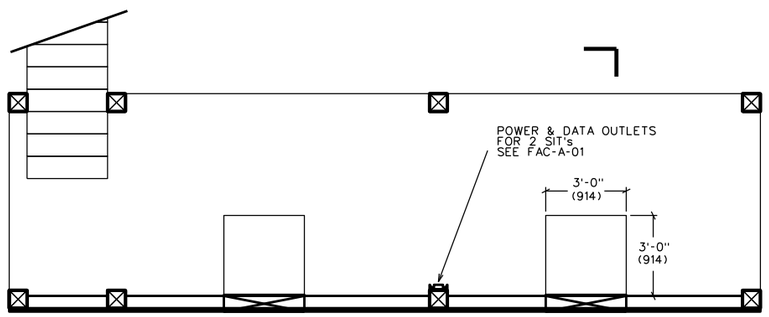

SECOND FLOOR PLAN

SCALE : N.T.S.

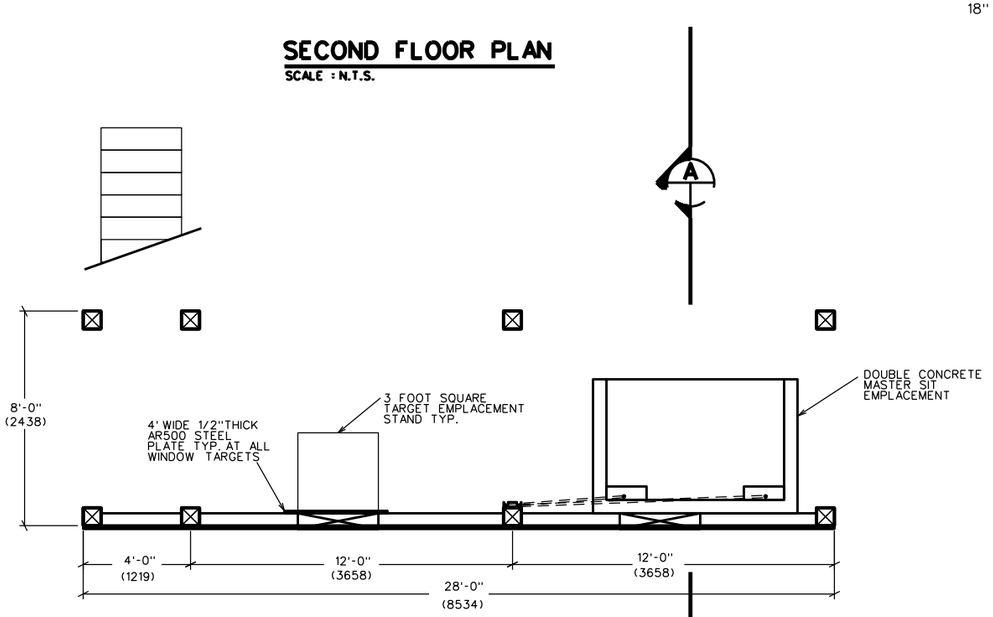

FIRST FLOOR PLAN

SCALE : N.T.S.

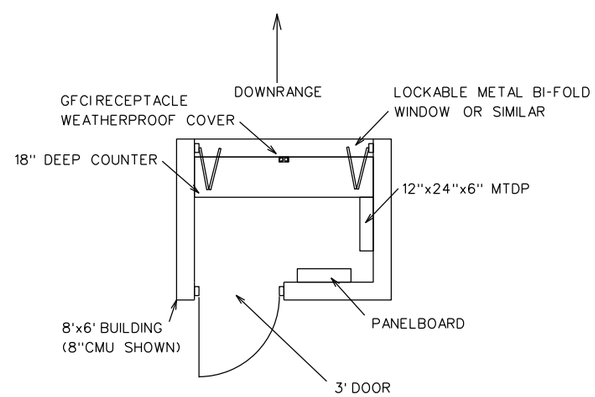

CONTROL SHED PLAN

SCALE : N.T.S.

NOTE:
PROVIDE 6mm to 12mm THICK, UV LIGHT AND OZONE RESISTANT, RUBBER MATTING ("LINATEX OZ", "RUMBER", OR SIMILAR) OR SOME OTHER SYSTEM ON THE FACE OF FRONT FACADE TO PREVENT SHATTERING OF THE WOOD FROM THE IMPACT OF THE GRENADES. THIS IS IN ADDITION TO A MINIMUM 19mm (3/4") TREATED PLYWOOD SIDING.

SEE FAC-A-01 FOR ADDITIONAL INFORMATION

FRAMING MEMBER SIZES ARE FOR REFERENCE ONLY
WALLS AND FOUNDATIONS MUST BE DESIGNED TO
LOCAL CONDITIONS (STRUCTURAL AND GEOTECH)

GRENADIER GUNNERY PLAN

SCALE : N.T.S.

US Army Corps of Engineers

Rev.	Description	Date	Approved

Designed by: | Date: | Rev.
Dwn by: | Ckd by: | Design file no.
Reviewed by: | Drawing code:
Submitted by: | File name: / Pw name: / Pw level:

U. S. ARMY ENGINEERING AND SUPPORT CENTER, HUNTSVILLE
HUNTSVILLE, ALABAMA

1 OCT 2009

RANGE AND TRAINING LAND PROGRAM
STANDARD DESIGN MANUAL

UAC STATION 3
GRENADIER GUNNERY

Sheet reference number:
UAC-A-03