CROSS SECTION OF TANK TRAIL
1"=4'

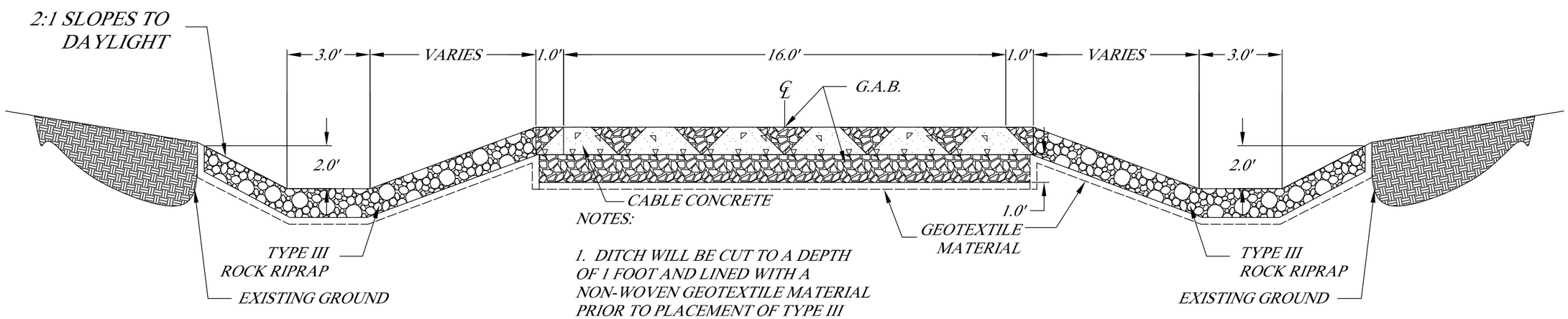

NOTES:

1. DITCH WILL BE CUT TO A DEPTH OF 1 FOOT AND LINED WITH A NON-WOVEN GEOTEXTILE MATERIAL PRIOR TO PLACEMENT OF TYPE III ROCK RIPRAP.

2. ALL BACK SLOPES SHALL BE CUT TO A 2:1 GRADE TO DAYLIGHT.

		Date
Designed	S.J. Blackston	11/2006
Drawn	S.J. Blackston	11/2006
Checked	CEJ/GMG	11/2006
Approved	G.M. GRIMM	11/2006

MILITARY ENVIROMENTAL TECHONLOGY DEMO CENTER
ABERDEEN TEST CENTER

ENVIRONMENTAL QUALITY TECHNOLOGY PROGRAM, A(2.5.E) SUSTAINABLE ARMY LIVE-FIRE RANGE DESIGN AND MAINTENANCE

TANK TRAIL DESIGN & ACCESS SERVICE ROAD
CROSS SECTION OF TANK TRAIL

ARMY Environmental Quality Technology Program

File Name:
9C0520000001K2-024-0

Project Designation:
9C0520000001K2

11/2006

Sheet 24 of 24

REVISIONS		
DATE	APPROVED	TITLE

9C0520000001K2-024-0

STANDARD DWG. NO.

DATE: 11/2006 | SHEET 24 OF 24