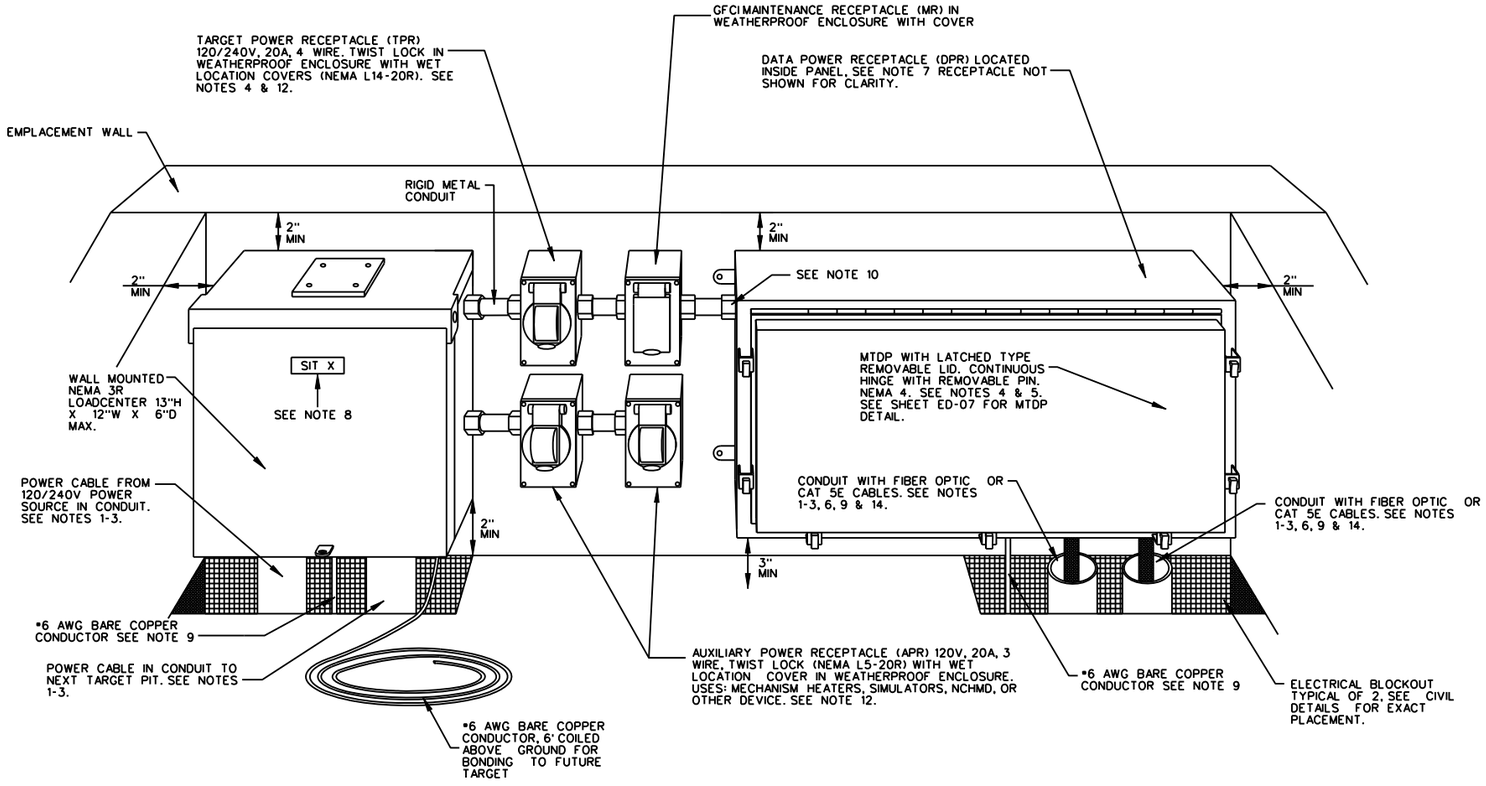

SIT TARGET ELEVATION

SCALE: NOT TO SCALE

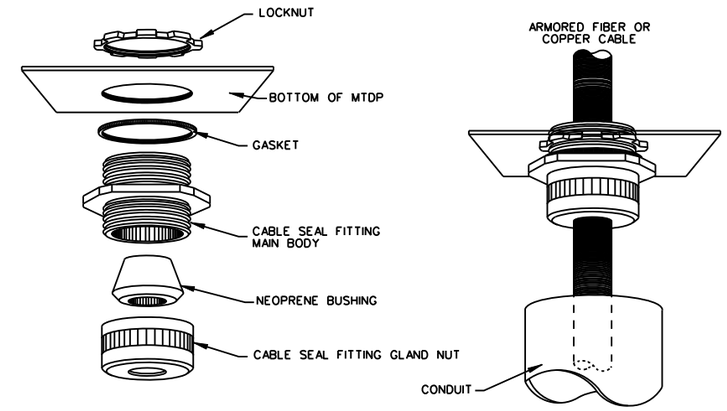

CABLE SEAL FITTING DETAIL

SCALE: NOT TO SCALE

NOTE: NEOPRENE BUSHING SHALL HAVE THE SAME NUMBER OF HOLES TO MATCH THE NUMBER OF CABLES ENTERING OR EXITING THE ENCLOSURE.

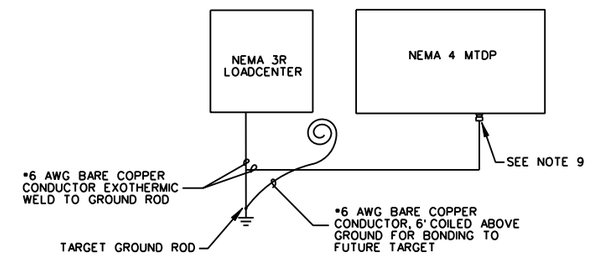

EMPLACEMENT GROUNDING DETAIL

SCALE: NOT TO SCALE

NOTES:

1. CONDUIT TO EXTEND 5 FEET BEYOND EMPLACEMENT.
2. CABLES/CONDUITS ARE ROUTED FROM SIDE OF BERM TO PREVENT CABLE DAMAGE DURING MAINTENANCE OF BERM.
3. ROUTE UNDER SLAB. POWER AND DATA INSTALLED IN SAME TRENCH.
4. EQUIPMENT SHALL NOT BE MOUNTED HIGHER THAN 2" FROM TOP OF EMPLACEMENT WALL.
5. WHEN FIBER OPTIC CABLE IS NOT USED, 12"X12" TARGET DATA PANEL (TDP) CAN BE USED INSTEAD OF 24"X12" MASTER TARGET DATA PANEL (MTDP). FIBER PATCH PANEL IS NOT REQUIRED IN TDP.
6. THE ENDS OF THE CAT5E CABLES SHALL BE TERMINATED WITH A DATA SURGE PROTECTOR.
7. WIRE THE DPR AHEAD OF THE GFCI MAINTENANCE RECEPTACLE TO AVOID NUISANCE TRIPPING.
8. PERMANENTLY LABEL THE EMPLACEMENT ACCORDING TO THE CIVIL AND ELECTRICAL DESIGNATIONS.
9. PROVIDE SEAL FITTINGS AS SHOWN IN CABLE SEAL FITTING DETAIL ON ALL CABLE ENTRANCES INTO NEMA 4, 4X, OR 6P RATED ENCLOSURES.
10. INSTALL MYERS TYPE HUBS ON ALL CONDUIT PENETRATIONS TO SIDE OF ENCLOSURE.
11. ALL DIMENSIONS SHOWN IN INCHES UNLESS OTHERWISE NOTED.
12. PROVIDE TARGET AND AUXILIARY OUTLETS WITH NEMA 3R WET LOCATION COVERS MAKING OUTLETS SUITABLE FOR USE IN WET LOCATIONS. SEE DETAIL THIS SHEET FOR WET LOCATION COVER. IN USE COVERS SUCH AS LEVITON M59X TYPE OUTLET COVER WILL NOT CLOSE OVER TARGET PLUG AND CORD.
13. DEVIATIONS TO THE EQUIPMENT SIZES, EQUIPMENT NUMBERS, RECEPTACLE COVERS, OR CABLE ENTRY METHODS INTO ENCLOSURES WILL REQUIRE RANGE TRAINING AND LAND PROGRAM HUNSTVILLE CENTER MANDATORY CENTER OF EXPERTISE APPROVAL.
14. CONDUIT STUBBED UP AS CLOSE TO CABLE SEAL FITTING AS POSSIBLE.

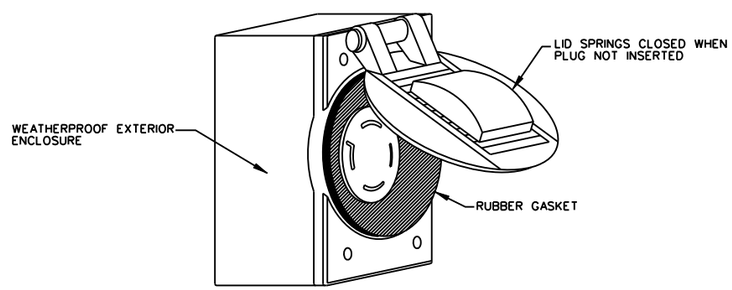

WET LOCATION RECEPTACLE COVER

SCALE: NOT TO SCALE

NOTE: WEATHERPROOF, IN-USE WET LOCATION COVERS SHALL BE PROVIDED WITH ETHYLENE PROPYLENE RUBBER GASKETS AROUND FACE OF RECEPTACLE TO PREVENT THE ENTRANCE OF MOISTURE AND DIRT WITH COVER OPEN AND PLUG INSERTED. COVER SHALL ACCEPT MALE PLUG WITH DIAMETER OF 1.8" - 1.95".

GENERAL NOTE:

THIS EMPLACEMENT DETAIL ALSO APPLIES FOR BATTLE EFFECTS SIMULATORS, MORTARS SIMULATION DEVICES, AND SOUND EFFECTS SIMULATORS.

PANEL BOARD: PB-xx LOCATION: XXXXXXX MOUNTED: SURFACE FEED: BOTTOM

100 MINIMUM MAIN LUGS ONLY ASYM A.I.C. MIN.:10,000

VOLTAGE: 240/120 PHASE: 1 WIRE: 3 RATING: NEMA 3R

LOAD SERVED	NO. POLES	TRIP AMPS	WIRE SIZE	VA/ PHASE A	VA/ PHASE B	CKT NO.	CKT. NO.	VA/ PHASE A	VA/ PHASE B	WIRE SIZE	TRIP AMPS	NO. POLES	LOAD SERVED
SURGE ARRESTOR	2	—	—	—	—	1	2	480	480	12	20	2	SIT (NEMA L14-20R, 2-NEMA L5-20R)
FEED THRU PROVISIONS	2	—	—	—		5	6	50		12	20	1	TDP AND MR
							8		—	—	20	1	SPARE
				0	0			530	480				

TOTAL VA PHASE: A: 530
TOTAL VA PHASE: B: 480

TOTAL CONNECTED WATTAGE: 1,010
95% DEMAND WATTAGE: 960

SUPPLIED FROM: TRSF-XX

TOTAL DEMAND AMPS: 4

US Army Corps of Engineers

Rev.	Description	Date	Approved

Designed by: Date: Rev.
Dwn by: Ckd by: Design file no.
Reviewed by: Drawing code:
Submitted by: File name: Plot scale: Plot date:

U. S. ARMY ENGINEERING AND SUPPORT CENTER, HUNTSVILLE
HUNTSVILLE, ALABAMA

FEBRUARY 2010

RANGE AND TRAINING LAND PROGRAM
STANDARD DESIGN MANUAL

STATIONARY INFANTRY TARGET
ELECTRICAL DETAILS

Sheet reference number:
ED-01

Sheet of