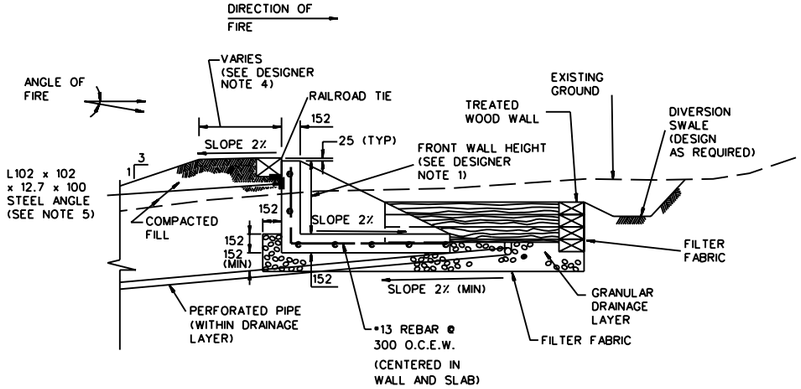

SECTION B C-1 C-1
SCALE: N.T.S.

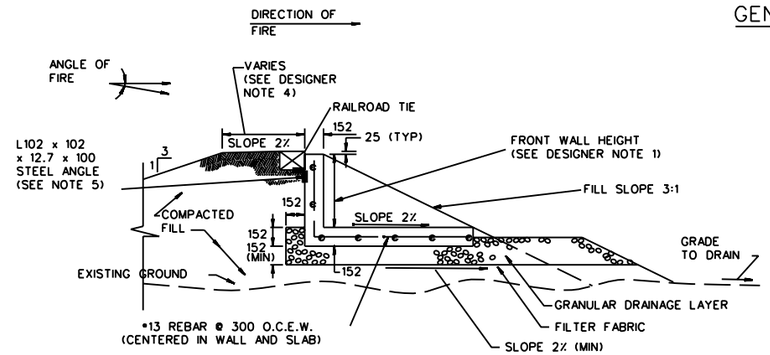

SECTION A C-1 C-1
SCALE: N.T.S.

GENERAL NOTES:

1. CONCRETE SHALL DEVELOP A MINIMUM COMPRESSIVE STRENGTH OF 28 MPa IN 28 DAYS.
2. EMPLACEMENTS SHALL BE CONSTRUCTED OF REINFORCED CONCRETE; CONCRETE STRUCTURES SHALL BE PRECAST OR CAST-IN-PLACE.
3. ALL REINFORCING STEEL SHALL BE PER ASTM A615, GRADE 60.
4. AREAS DISTURBED BY CONSTRUCTION ACTIVITIES SHALL BE REVEGETATED OR RESURFACED CONSISTENT WITH THE NATURAL SURROUNDINGS. GROUND COVER SHALL NOT REDUCE TARGET VISIBILITY.
5. PLACE RAILROAD TIES AGAINST CONCRETE WALL ON L102x 102 x 12.7mm x 100mm STEEL ANGLES SPACED A MAXIMUM OF 900mm ON CENTER. ATTACH ANGLE TO CONCRETE WALL WITH CONCRETE ANCHORS.
6. ALL DIMENSIONS ARE mm UNLESS OTHERWISE INDICATED.

* 2020 FOR DOUBLE MECHANISM EMPLACEMENT

** 2324 FOR DOUBLE MECHANISM EMPLACEMENT

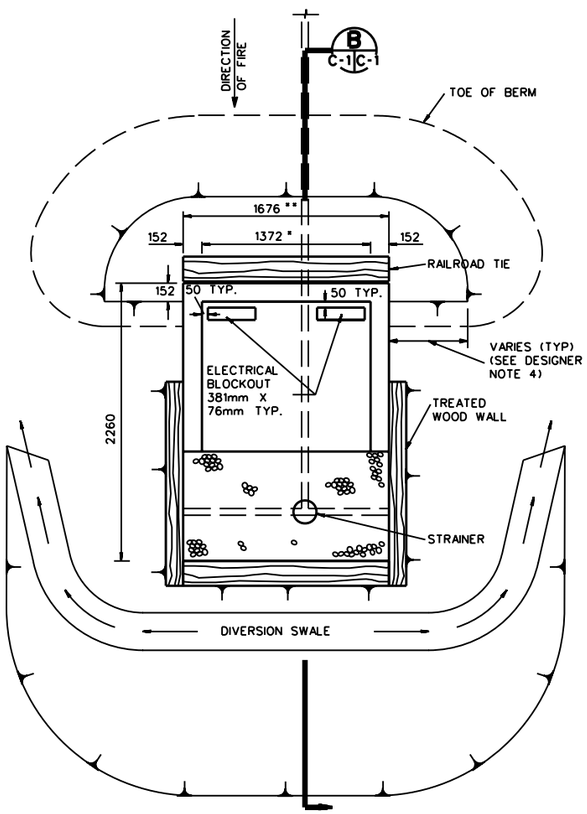

PLAN
ASCENDING SLOPE OR BELOW GRADE EMPLACEMENT
SCALE: N.T.S.

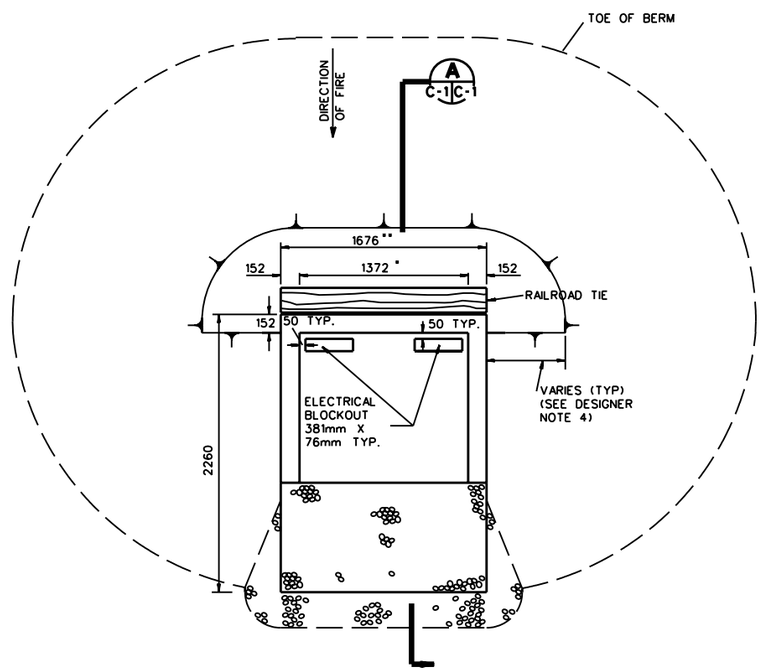

PLAN
SURFACE / FILL EMPLACEMENT
SCALE: N.T.S.

NOTES TO DESIGNER:

1. MINIMUM FRONT WALL HEIGHT IS 457 mm. THE FRONT WALL MUST BE HIGH ENOUGH TO PROTECT THE TARGETRY EQUIPMENT WHILE STILL ALLOWING A MINIMUM OF 90% OF THE TARGET TO BE VISIBLE FROM THE FIRING POSITION. THE MINIMUM WALL HEIGHT OF 457mm PROVIDES TARGET EQUIPMENT PROTECTION UP TO A 15° ANGLE OF FIRE. (THE TARGET ARMS AND CLAMP ARE NOT PROTECTED ABOVE 10°.) IT ALSO ALLOWS 90% VISIBILITY DOWN TO A -2° ANGLE OF FIRE. A GEOMETRIC ANALYSIS WILL BE REQUIRED FOR ANGLES OF FIRE GREARER THAN 15° OR LESS THAN -2°. ANGLES OF FIRE OVER 15° MAY REQUIRE INCREASING THE HEIGHT OF THE FRONT WALL. ANGLES OF FIRE LESS THAN -2° MAY REQUIRE RAISING THE TARGET LIFTER OR INSTALLING LONGER TARGET ARMS. ON RANGES WHERE TARGETS ARE ENGAGED FROM MULTIPLE POINTS. THE DESIGNER MUST COORDINATE CLOSELY WITH THE INSTALLATION AND THE TARGETRY PROVIDER TO DETERMINE THE CORRECT FRONT WALL HEIGHT.
2. RETAINING WALLS SHALL BE CONSTRUCTED OF ADEQUATELY CONNECTED TIMBERS OR RAILROAD TIES (MAY BE PREFABRICATED). FILTER FABRIC SHALL BE INSTALLED BEHIND ALL WOOD RETAINING WALLS. FABRIC SHALL EXTEND THE FULL HEIGHT OF THE WALL.
3. THE DESIGNER SHOULD USE THE BELOW GRADE EMPLACEMENT DESIGN TO PROVIDE MORE REALISTIC TRAINING, IF THE SITE CONDITIONS ARE ADEQUATE TO SUPPORT POSITIVE DRAINAGE OF THE TARGET EMPLACEMENT. THE TOP OF THE SUBGRADE SHOULD HAVE A MINIMUM LONGITUDINAL SLOPE OF 2% TOWARD THE FRONT OF THE EMPLACEMENT.
4. REFER TO THE BERM THICKNESS FIGURES LOCATED IN THE DESIGN MANUAL TO DETERMINE THE REQUIRED BERM THICKNESS.
5. BERM SLOPES SHOWN AS 3:1 ARE TYPICAL. DIFFERENT SLOPES MAY BE REQUIRED BY SITE SPECIFIC GEOTECHNICAL REPORT.

STATIONARY INFANTRY TARGET EMPLACEMENT

US Army Corps of Engineers

Rev.	Description	Date	Approved

Designed by: Date: Rev.
Dwn by: Ckd by: Design file no.
Reviewed by: Drawing code:
Submitted by: File name: Plot date: Plot scale:

U. S. ARMY ENGINEERING AND SUPPORT CENTER, HUNTSVILLE
HUNTSVILLE, ALABAMA

30 MAY 2006

RANGE AND TRAINING LAND PROGRAM
STANDARD DESIGN MANUAL

STATIONARY INFANTRY TARGET EMPLACEMENT

Sheet reference number:
CD-01
Sheet of