RANGE LAYOUT DRAWINGS
URBAN RANGES

TC 25-8 FIGURE NUMBER	FCC *	TITLE	LAYOUT DRAWING DATE	RDG SECTION
24	17878	Urban Assault Course	May-10	X
25	17879	Live Fire Exercise Shoothouse	May-07	X
26	17880	Live Fire Exercise Breach Facility	April-05	X
36	17901	Combined Arms Collective Training Facility	June-08	X
37	17996	Collective Training Facility		

RANGE AND TRAINING LAND PROGRAM
MANDATORY CENTER OF EXPERTISE
RANGE DESIGN GUIDE

U. S. ARMY ENGINEERING AND
SUPPORT CENTER, HUNTSVILLE
HUNTSVILLE, ALABAMA

US Army Corps of Engineers

Rev. *	Description	Date	Approved

Designed by: | Date: | Rev.
Det by: | Det by: | Design file no.
Reviewed by: | Drawing code:
Submitted by: | File name / Plot scale / Plot scale:

U. S. ARMY ENGINEERING AND SUPPORT CENTER, HUNTSVILLE HUNTSVILLE, ALABAMA

FEBRUARY 2011

RANGE AND TRAINING LAND PROGRAM
STANDARD DESIGN MANUAL

COVER SHEET

Sheel reference number:
RL-00

Sheet of

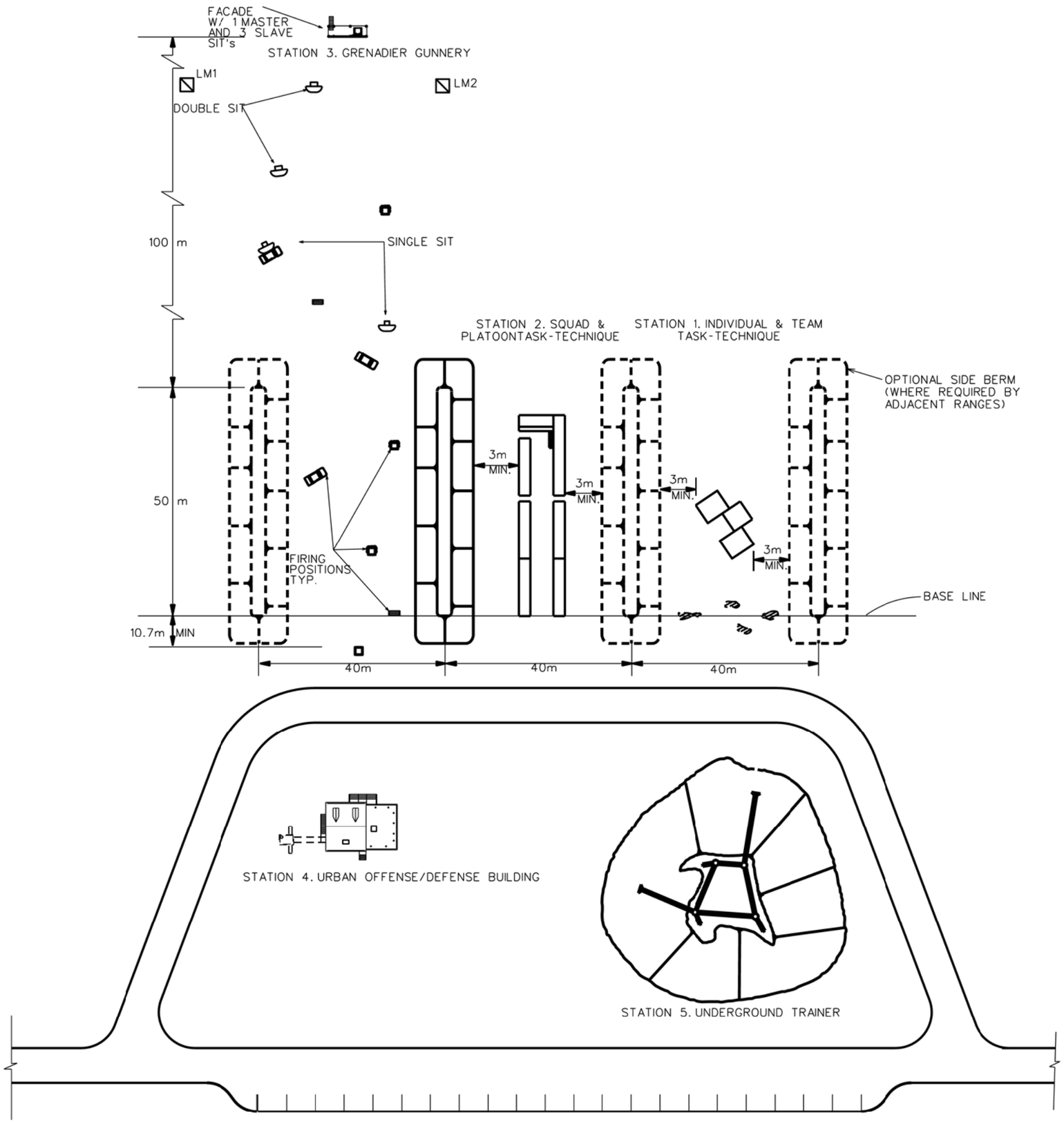

LEGEND:

- CONTROL SHED
- COVER (SEE NOTE 2)
- LM — LIMIT MARKER
- RUBBLE
- BERM
- JUNK VEHICLE
- HASTY POSITION
- SHORT WALL
- SANDBAG/SOIL TARGET BERM (SIT EMPLACEMENT)
- TARGET OUTLET (T.O.)

NOTES:

1. SEE LEGEND FOR IDENTIFICATION OF COVER, FIRING POSITIONS, AND OTHER FEATURES.
2. COVER IS IDENTIFIED AS TREES, BRUSH OR OTHER FORMS OF VEGETATION THAT COVER THE AREAS INDICATED.
3. PROVIDE BERMS OF ADEQUATE HEIGHT AND LENGTH TO PROTECT PERSONNEL IN ADJACENT ACTIVITIES.
4. ONLY TRAINING ROUNDS WILL BE USED ON THE GRENADIER GUNNERY STATION.

US Army Corps of Engineers

Rev.	Description	Date	Approved

Designed by: Date: Rev.
Dwn by: Ckd by: Design file no.
Reviewed by: Drawing code:
Submitted by: File name: File code: Plot scale:

U. S. ARMY ENGINEERING AND SUPPORT CENTER, HUNTSVILLE
HUNTSVILLE, ALABAMA

MAY 2010

RANGE AND TRAINING LAND PROGRAM
STANDARD DESIGN MANUAL

URBAN ASSAULT COURSE

SITE LAYOUT

Sheet reference number:
UAC-C-01

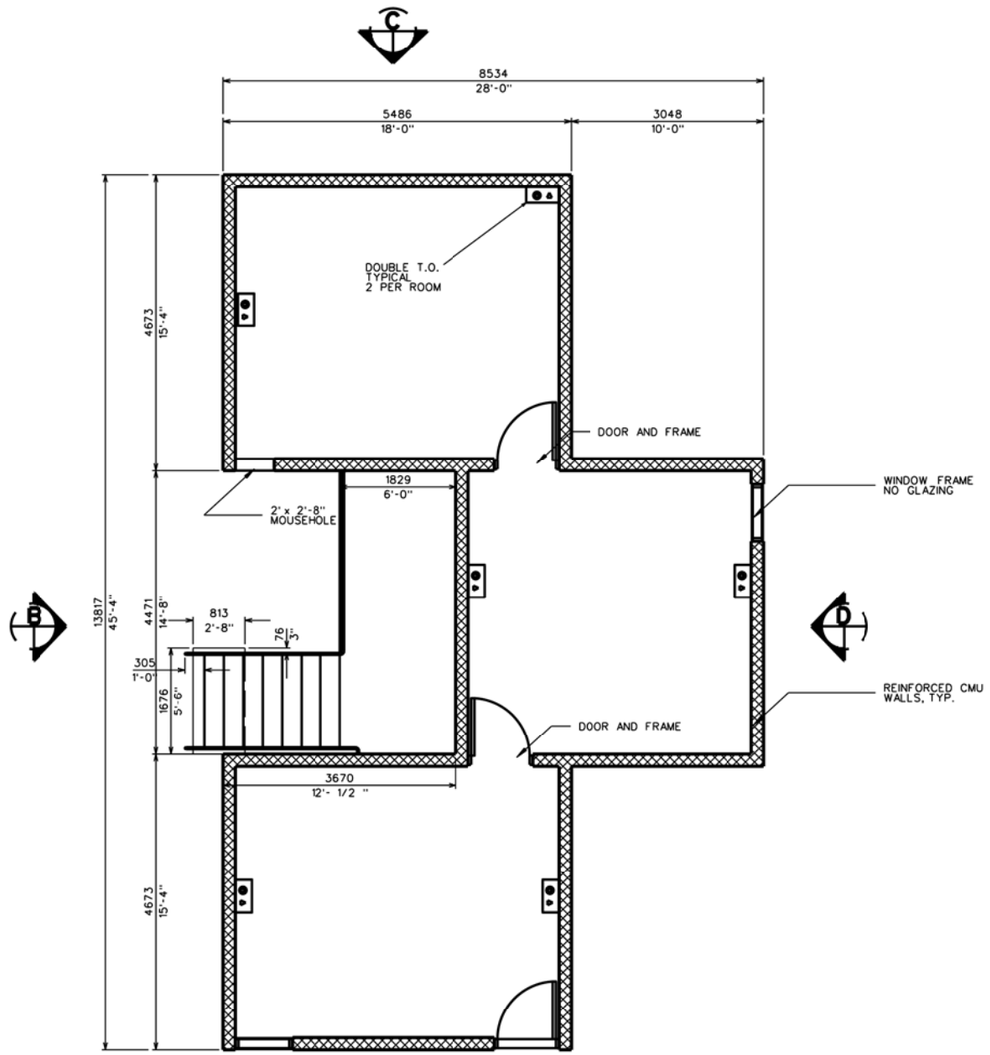

DIRECTION OF ATTACK
DOWNRANGE

A INDIVIDUAL AND TEAM TRAINER - STATION 1

SCALE : 1/4" = 1'-0"

NOTES:
WALLS AND FOUNDATIONS SHALL BE DESIGNED TO LOCAL CONDITIONS (STRUCTURAL AND GEOTECH)

PROVIDE GRAVEL FLOORS: ENSURE PROPER DRAINAGE

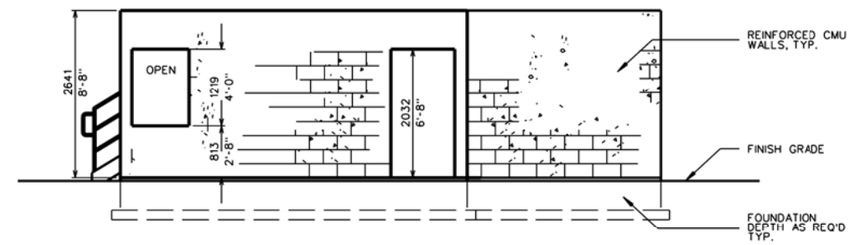

A INDIVIDUAL AND TEAM TRAINER - STATION 1 - ELEVATION

SCALE : 1/4" = 1'-0"

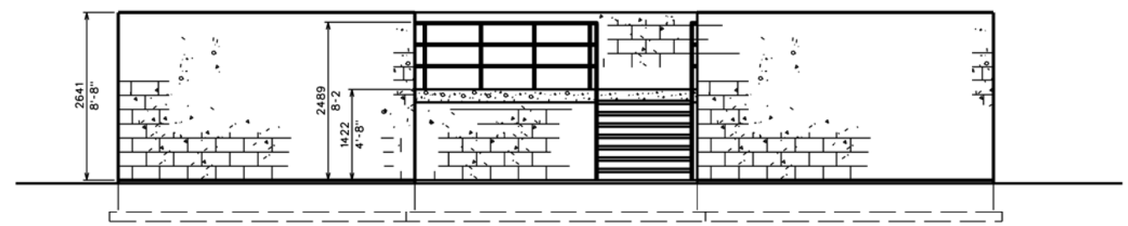

B INDIVIDUAL AND TEAM TRAINER - STATION 1 - ELEVATION

SCALE : 1/4" = 1'-0"

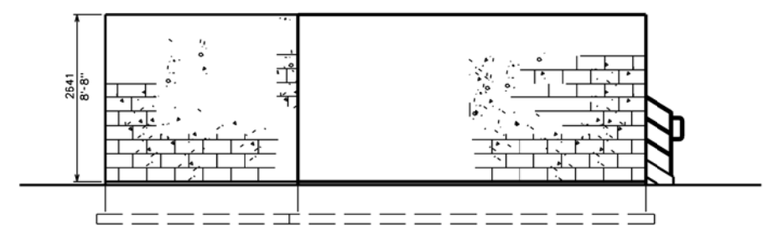

C INDIVIDUAL AND TEAM TRAINER - STATION 1 - ELEVATION

SCALE : 1/4" = 1'-0"

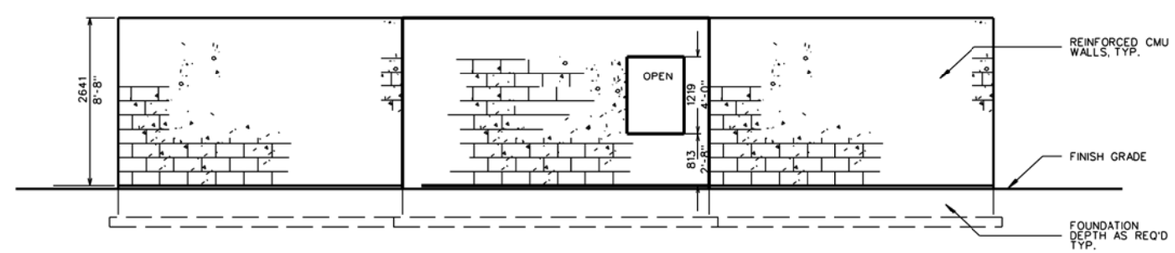

D INDIVIDUAL AND TEAM TRAINER - STATION 1 - ELEVATION

SCALE : 1/4" = 1'-0"

US Army Corps of Engineers

Rev.	Description	Date	Approved

Designed by: | Date: | Rev.
Dwn by: | Ckd by: | Design file no.
Reviewed by: | Drawing code:
Submitted by: | File name: Plot scale: Plot size:

U. S. ARMY ENGINEERING AND SUPPORT CENTER, HUNTSVILLE
HUNTSVILLE, ALABAMA

JUNE 2010

RANGE AND TRAINING LAND PROGRAM
STANDARD DESIGN MANUAL

URBAN ASSAULT COURSE
STATION 1
INDIVIDUAL AND TEAM TECHNIQUES

Sheet reference number:
UAC-A-01

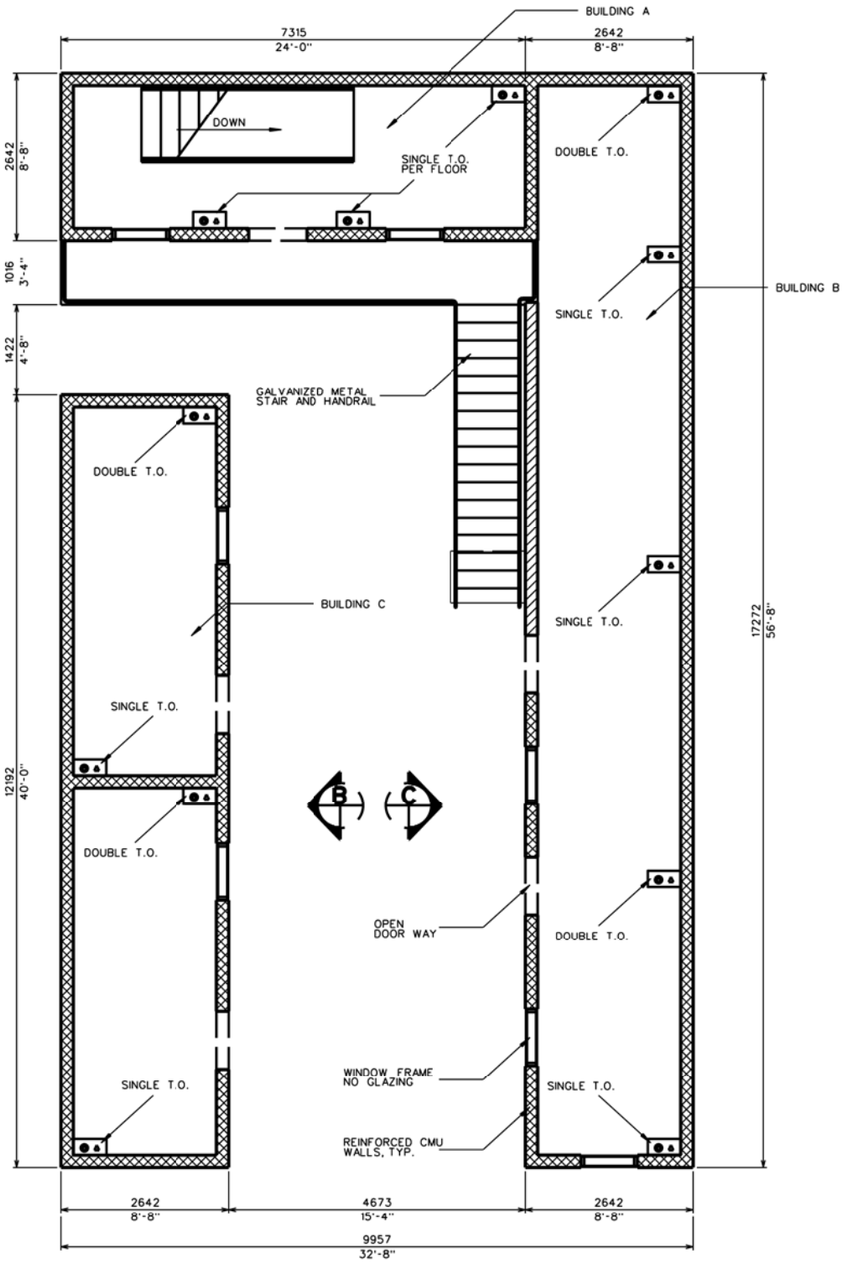

1 INDIVIDUAL AND TEAM TRAINER - STATION 2

SCALE : 1/4" = 1'-0"

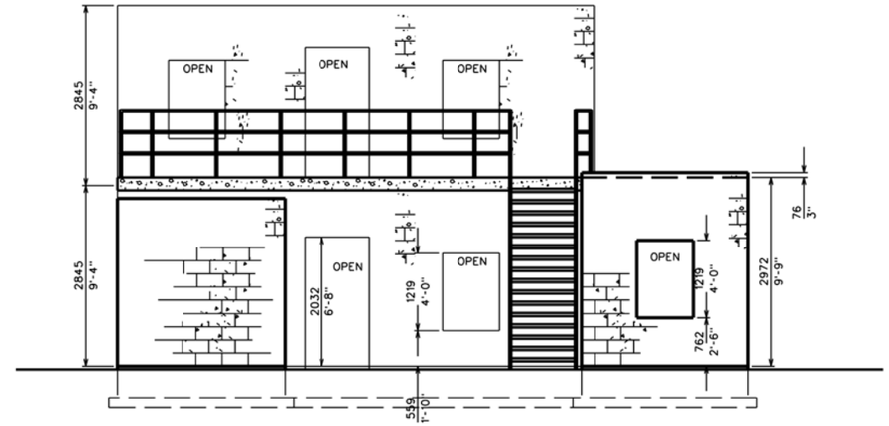

A INDIVIDUAL AND TEAM TRAINER - STATION 2 - ELEVATION

SCALE : 1/4" = 1'-0"

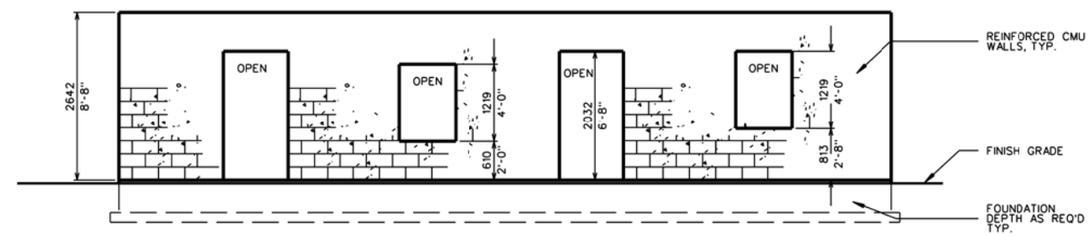

B INDIVIDUAL AND TEAM TRAINER - STATION 2 - ELEVATION

SCALE : 1/4" = 1'-0"

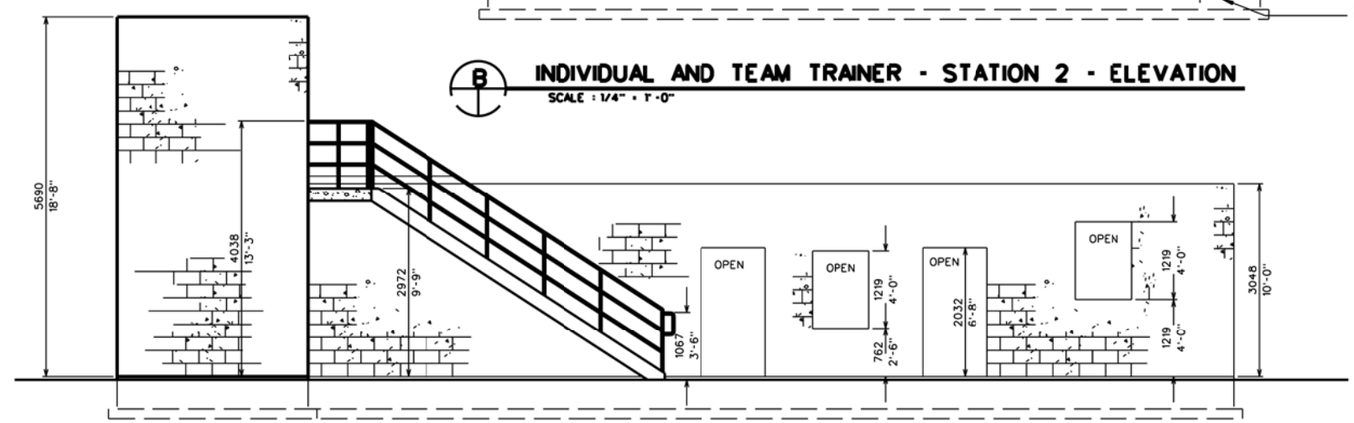

C INDIVIDUAL AND TEAM TRAINER - STATION 2 - ELEVATION

SCALE : 1/4" = 1'-0"

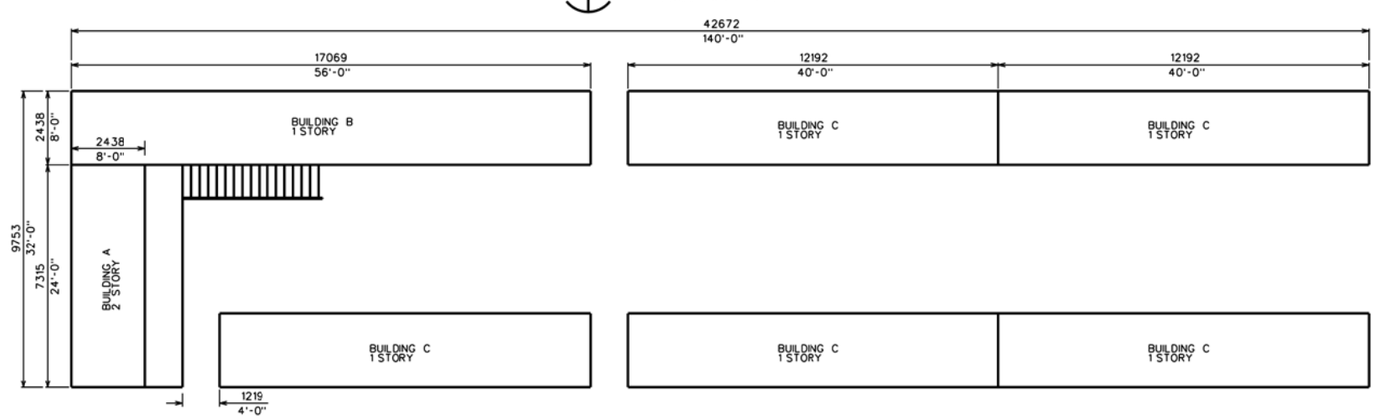

NOTES:
WALLS AND FOUNDATIONS SHALL BE DESIGNED TO LOCAL CONDITIONS (STRUCTURAL AND GEOTECH)

PROVIDE GRAVEL FLOORS: ENSURE PROPER DRAINAGE

US Army Corps of Engineers

Rev.	Description	Date	Approved

Designed by:
Dwn by:
Ckd by:
Reviewed by:
Submitted by:
Date:
Rev.
Design file no.
Drawing code:
File name:
Plot scale:
Plot date:

U. S. ARMY ENGINEERING AND SUPPORT CENTER, HUNTSVILLE
HUNTSVILLE, ALABAMA

JUNE 2010

RANGE AND TRAINING LAND PROGRAM
STANDARD DESIGN MANUAL

URBAN ASSAULT COURSE
STATION 2
INDIVIDUAL AND TEAM TECHNIQUES

Sheet reference number:
UAC-A-02

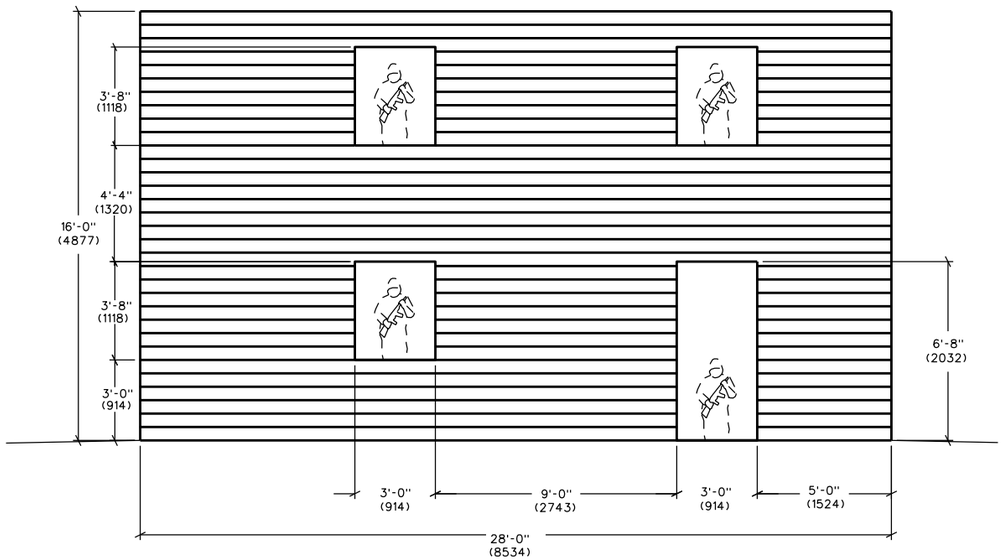

FRONT ELEVATION

SCALE : N.T.S.

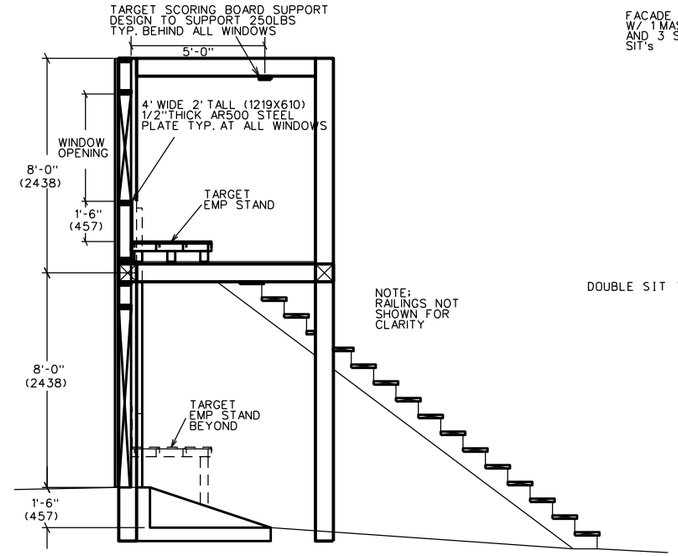

SECTION A

SCALE : N.T.S.

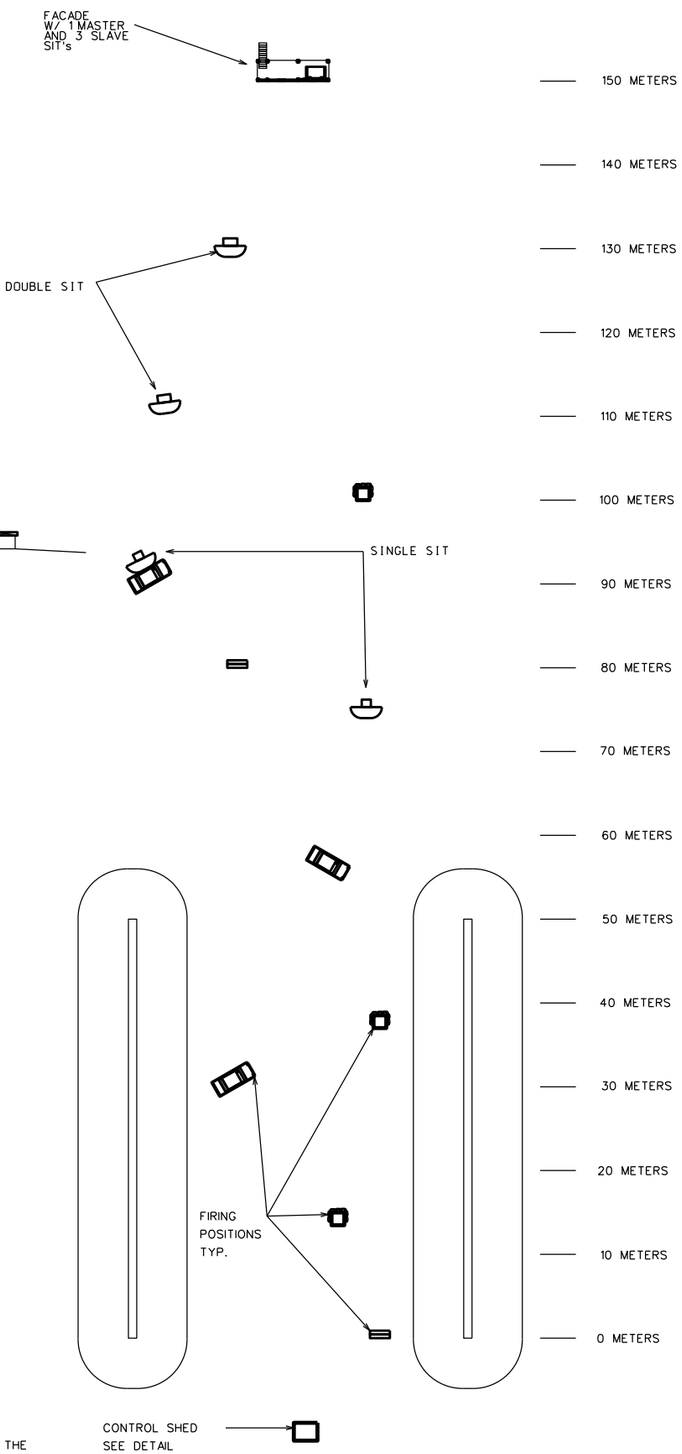

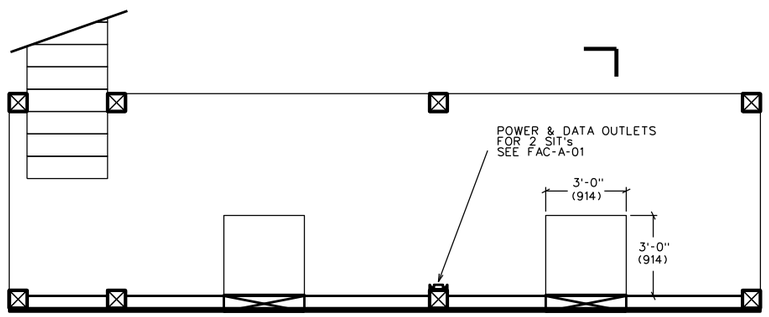

SECOND FLOOR PLAN

SCALE : N.T.S.

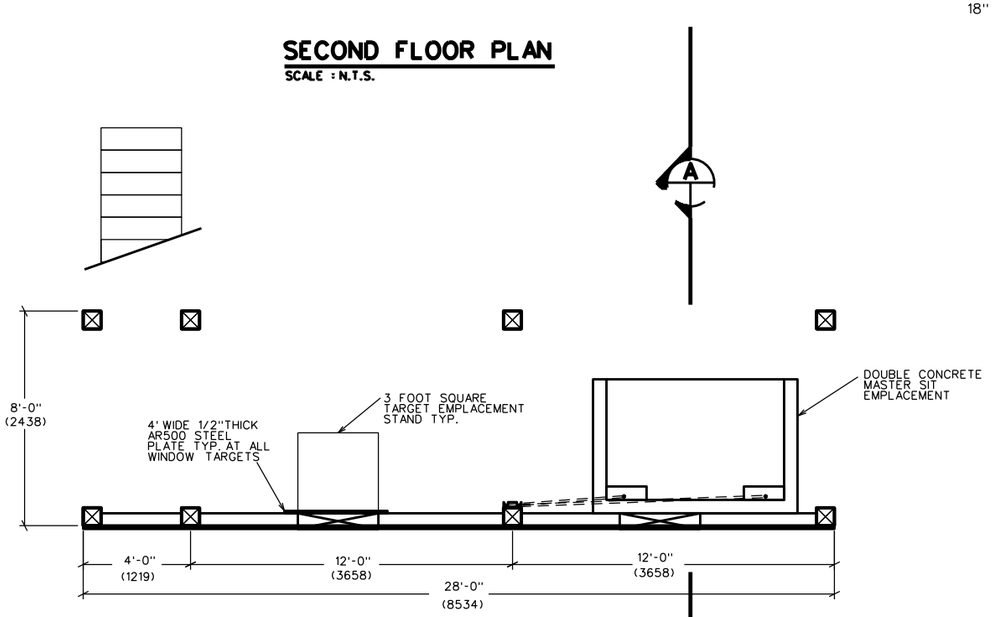

FIRST FLOOR PLAN

SCALE : N.T.S.

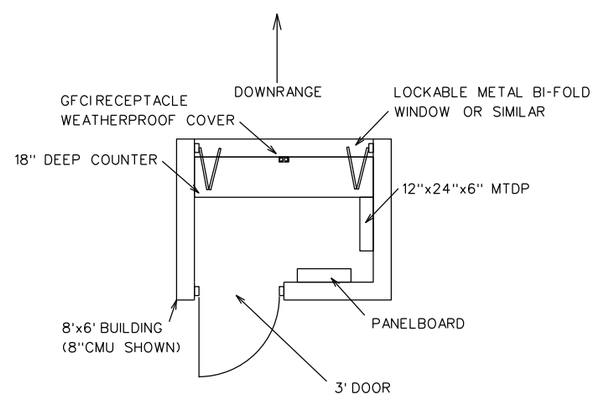

CONTROL SHED PLAN

SCALE : N.T.S.

NOTE:
PROVIDE 6mm to 12mm THICK, UV LIGHT AND OZONE RESISTANT, RUBBER MATTING ("LINATEX OZ", "RUMBER", OR SIMILAR) OR SOME OTHER SYSTEM ON THE FACE OF FRONT FACADE TO PREVENT SHATTERING OF THE WOOD FROM THE IMPACT OF THE GRENADES. THIS IS IN ADDITION TO A MINIMUM 19mm (3/4") TREATED PLYWOOD SIDING.

SEE FAC-A-01 FOR ADDITIONAL INFORMATION

FRAMING MEMBER SIZES ARE FOR REFERENCE ONLY
WALLS AND FOUNDATIONS MUST BE DESIGNED TO
LOCAL CONDITIONS (STRUCTURAL AND GEOTECH)

GRENADIER GUNNERY PLAN

SCALE : N.T.S.

US Army Corps of Engineers

Rev.	Description	Date	Approved

Designed by: | Date: | Rev.
Dwn by: | Ckd by: | Design file no.
Reviewed by: | Drawing code:
Submitted by: | File name: / Pw name: / Pw code:

U. S. ARMY ENGINEERING AND SUPPORT CENTER, HUNTSVILLE
HUNTSVILLE, ALABAMA

1 OCT 2009

RANGE AND TRAINING LAND PROGRAM
STANDARD DESIGN MANUAL

UAC STATION 3
GRENADIER GUNNERY

Sheet reference number:
UAC-A-03

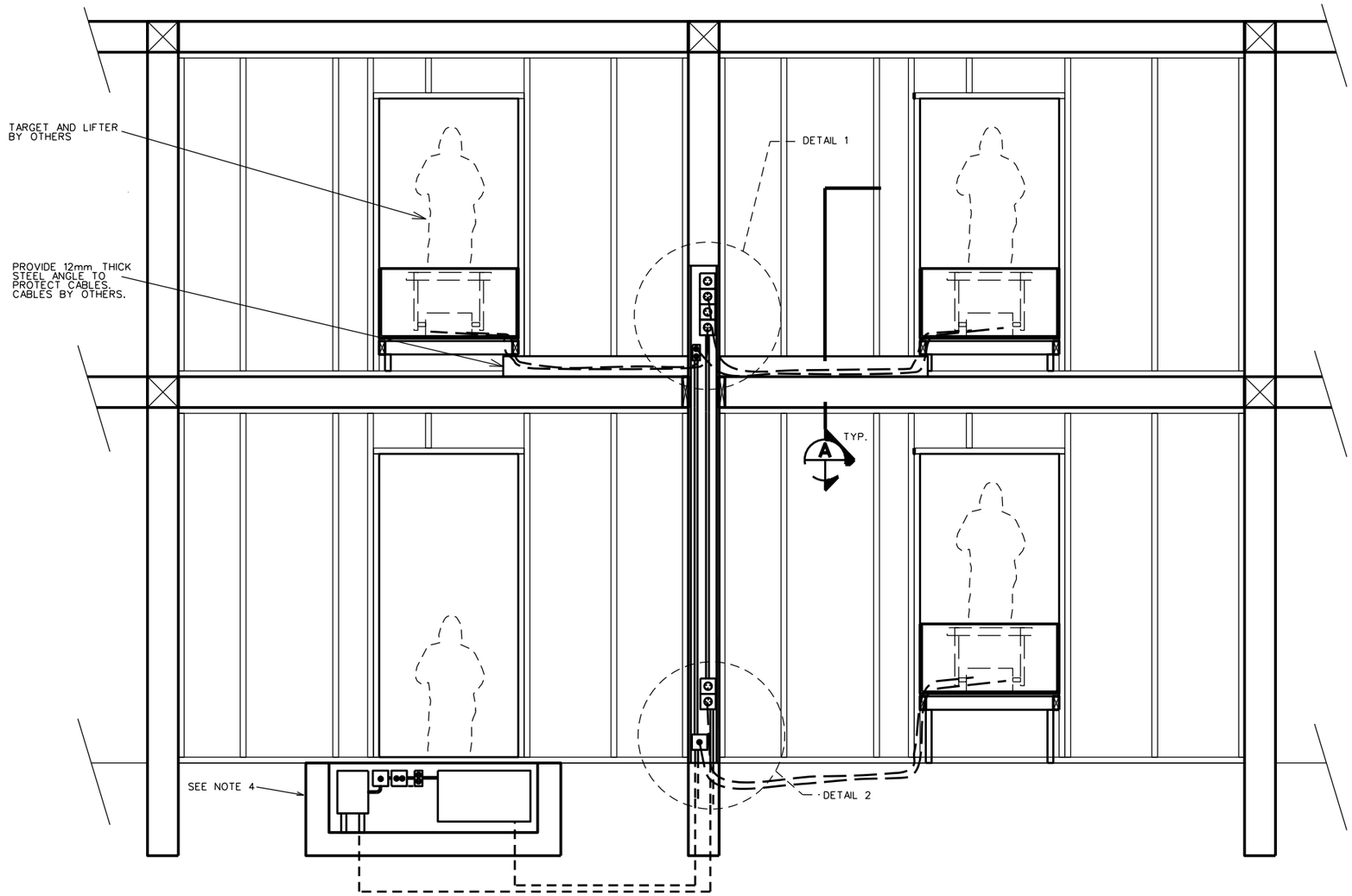

TYPICAL REAR ELEVATION

SCALE : N.T.S.

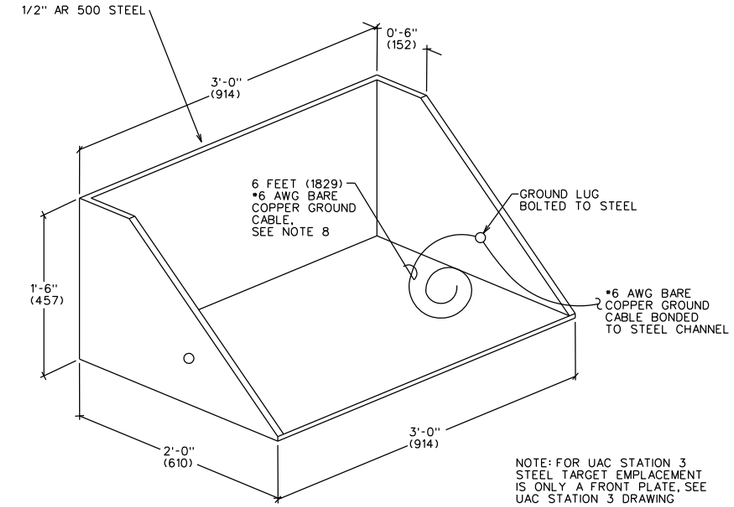

STEEL TARGET EMPLACEMENT

SCALE : N.T.S.

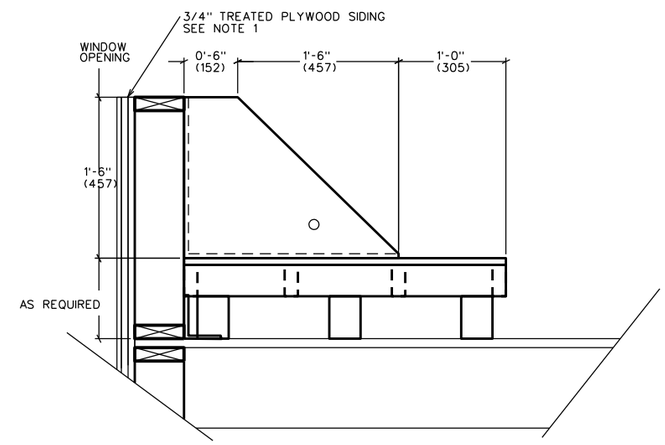

SECTION A

SCALE : N.T.S.

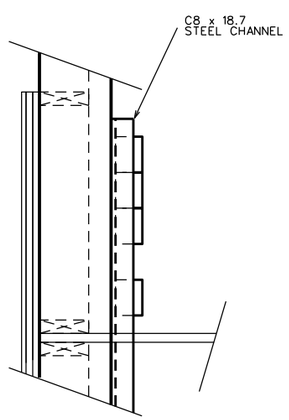

SECTION B

SCALE : N.T.S.

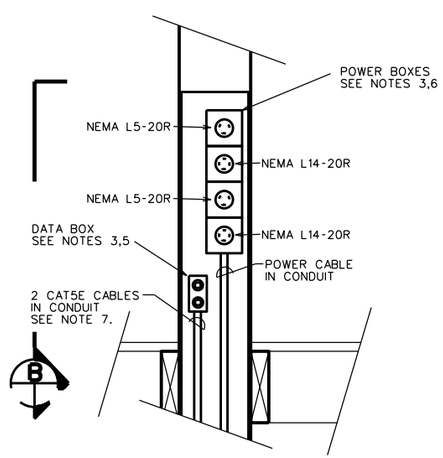

DETAIL 1

SCALE : N.T.S.

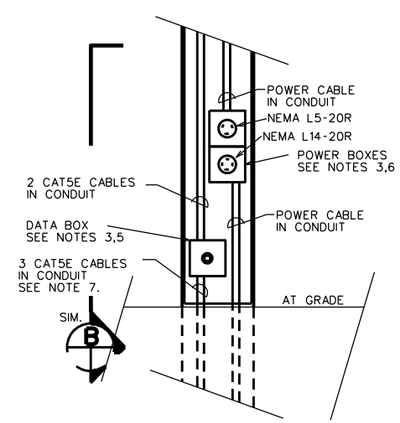

DETAIL 2

SCALE : N.T.S.

NOTES:

1. FOR UAC GRENADIER GUNNERY FACADE PROVIDE AN ADDITIONAL 6mm TO 12mm THICK, UV LIGHT AND OZONE RESISTANT, RUBBER MATTING ("LINATEX OZ" OR SIMILAR) ON THE FACE OF FRONT FACADE TO PREVENT SHATTERING OF THE WOOD FROM THE IMPACT OF THE GRENADES
2. SEE FAC-1-02 OR UAC-A-03 FOR INFORMATION NOT SHOWN
3. PROVIDE WEATHERPROOF EXTERIOR ENCLOSURES MOUNTED 305 AFG FOR FIRST FLOOR, 305 ABOVE PLATFORM ON SECOND FLOOR. PROVIDE CONDUIT SEAL WHEN CONDUIT ENTERS ENCLOSURES FROM THE TOP.
4. PROVIDE STANDARD SIT EMPLACEMENT AS SHOWN ON ED-01 BEHIND THE DOOR IN THE FACADE.
5. PROVIDE RJ45 MALE CONNECTION IN DATA BOXES. PROVIDE TWO RJ45 CONNECTIONS IN DATA BOX ON SECOND FLOOR. PROVIDE EACH MALE RJ45 CONNECTION WITH A FEMALE NEMA 4X RJ45 CONNECTOR FOR EASE OF REPLACEMENT IN FUTURE. PROVIDE A CONNECTOR CAP FOR EACH NEMA 4X RJ45 FEMALE CONNECTOR FOR WEATHERPROOF COVER WHEN NOT IN USE.
6. PROVIDE NEMA L14-20R AND NEMA L5-20R RECEPTACLE IN POWER BOXES EACH WITH WEATHERPROOF IN-USE COVERS. THE NEMA L14-20R AND NEMA L5-20R RECEPTACLES SHALL BE POWERED VIA CIRCUIT FROM THE LOADCENTER IN THE SIT EMPLACEMENT.
7. EACH CAT5E CABLE IS HOMERUNNED TO THE MASTER TARGET DATA PANEL IN THE SIT EMPLACEMENT.
8. BOND A 6 FOOT #6 AWG TO THE STEEL TARGET HOUSING LEAVING THE OTHER END COILED IN THE TARGET HOUSING FOR FUTURE CONNECTION TO TARGET MECHANISM. BOND EACH STEEL TARGET HOUSING TO THE STEEL CHANNEL USING A MINIMUM #6 AWG BARE COPPER GROUND CABLE. BOND THE STEEL CHANNEL TO THE TARGET GROUND ROD LOCATED IN THE SIT EMPLACEMENT BEHIND THE FACADE DOOR LOCATION USING A MINIMUM #6 AWG BARE COPPER GROUND CABLE.

US Army Corps of Engineers

Rev.	Description	Date	Approved

Designed by: | Date: | Rev.
Dwn by: | Ckd by: | Design file no.
Reviewed by: | Drawing code:
Submitted by: | File name: | Dwg number: | Pag. number:

U. S. ARMY ENGINEERING AND SUPPORT CENTER, HUNTSVILLE
HUNTSVILLE, ALABAMA

1 MAR 2009

RANGE AND TRAINING LAND PROGRAM
STANDARD DESIGN MANUAL

FACADE
EMPLACEMENT DETAILS

Sheet reference number:
FAC-A-01

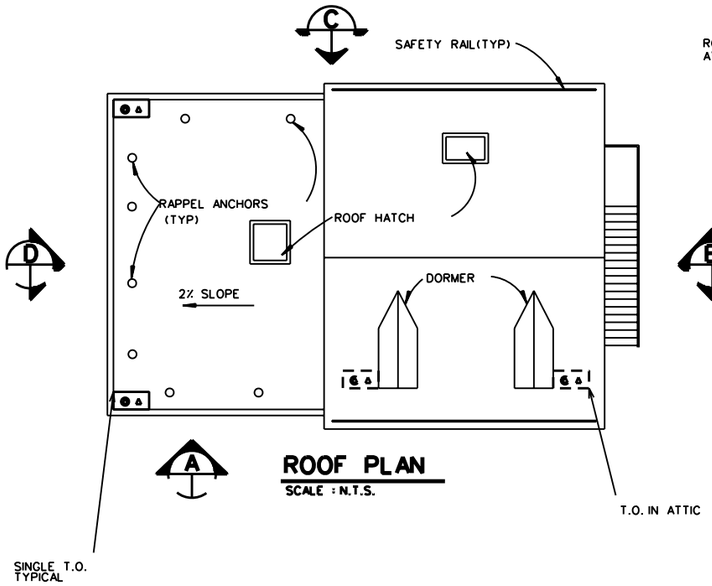

ROOF PLAN
SCALE : N.T.S.

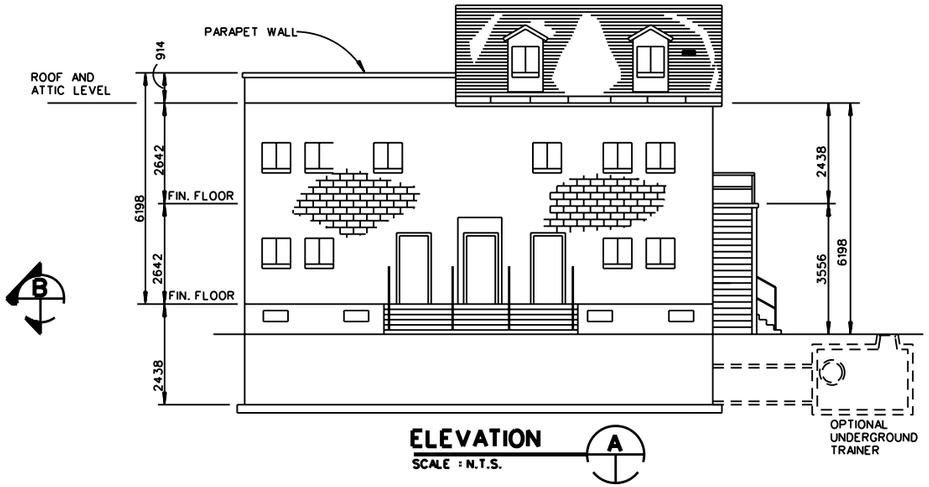

ELEVATION A
SCALE : N.T.S.

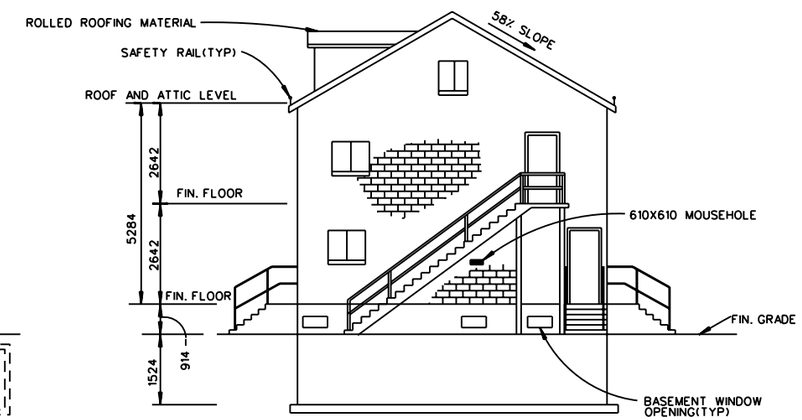

ELEVATION B
SCALE : N.T.S.

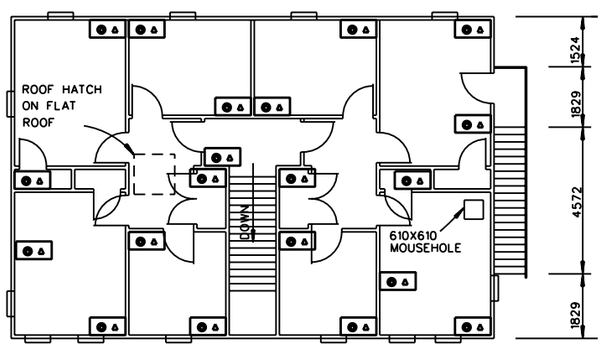

SECOND FLOOR PLAN
SCALE : N.T.S.

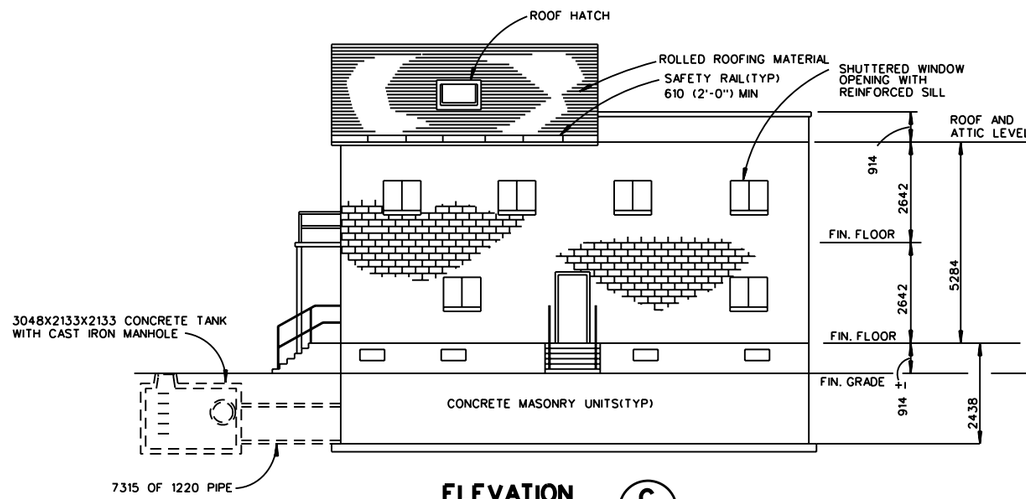

ELEVATION C
SCALE : N.T.S.

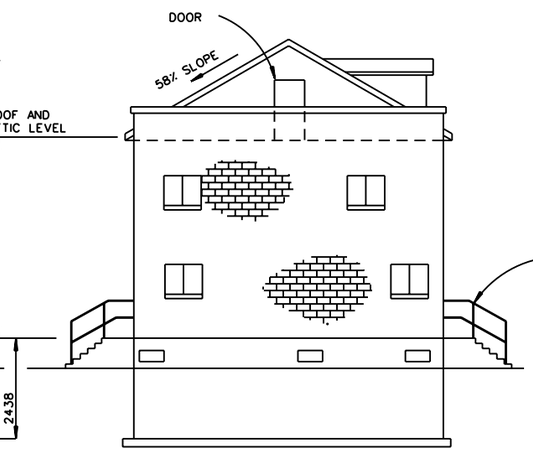

ELEVATION D
SCALE : N.T.S.

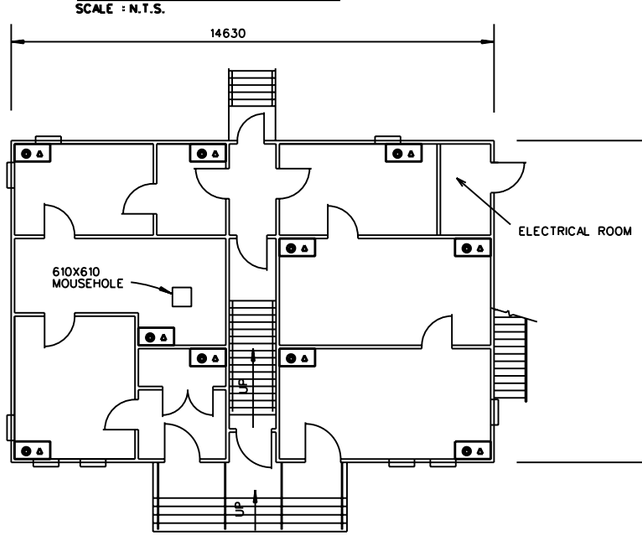

FIRST FLOOR PLAN
SCALE : N.T.S.

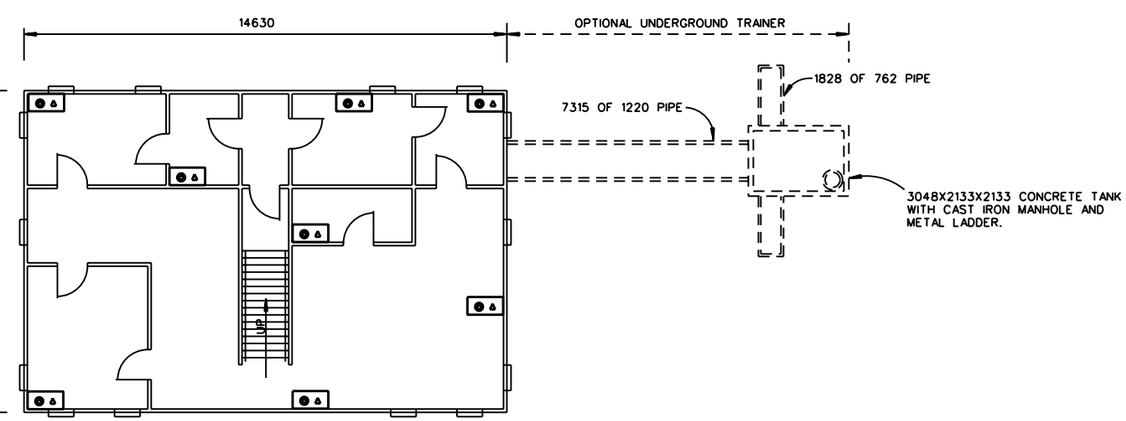

BASEMENT FLOOR PLAN
SCALE : N.T.S.

NOTE:
BUILDING IS NOT INTENDED FOR LIVE-FIRE TRAINING

FRAMING MEMBER SIZES ARE FOR REFERENCE ONLY WALLS AND FOUNDATIONS MUST BE DESIGNED TO LOCAL CONDITIONS (STRUCTURAL AND GEOTECH)

ALL MOUSE HOLES SHOULD BE PROVIDED WITH A COVER.

US Army Corps of Engineers

Rev.	Description	Date	Approved

Designed by: Date: Rev.
Dwn by: Ckd by: Drawing code:
Reviewed by: Design file no.
Submitted by: File name: Plot date: Plot scale:

U. S. ARMY ENGINEERING AND SUPPORT CENTER, HUNTSVILLE
HUNTSVILLE, ALABAMA

15 SEP 2007

RANGE AND TRAINING LAND PROGRAM
STANDARD DESIGN MANUAL

URBAN ASSAULT COURSE
STATION 4
URBAN OFFENSE/DEFFENSE BUILDING

Sheet reference number:
UAC-A-04

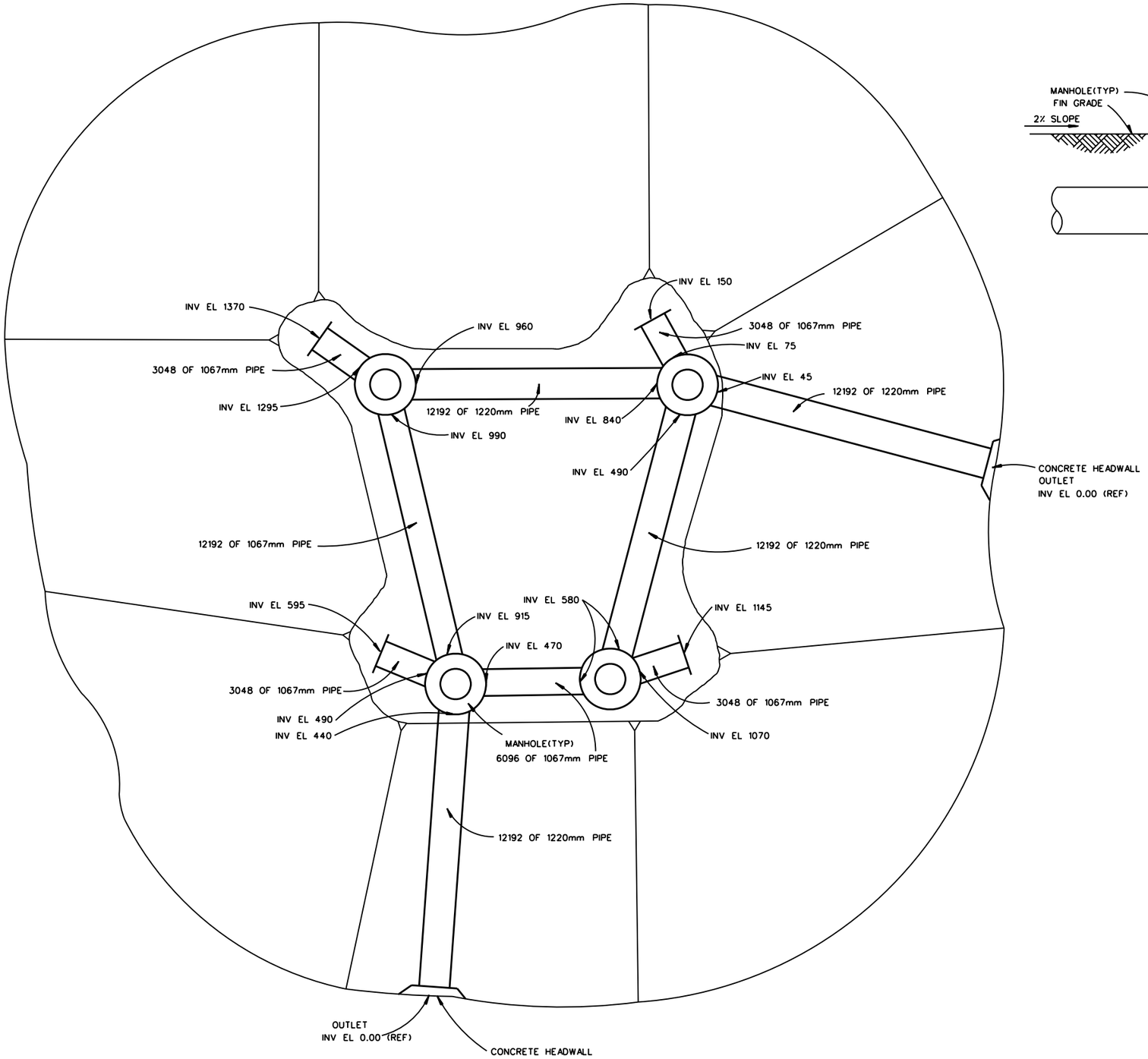

SITE PLAN

SCALE : N.T.S.

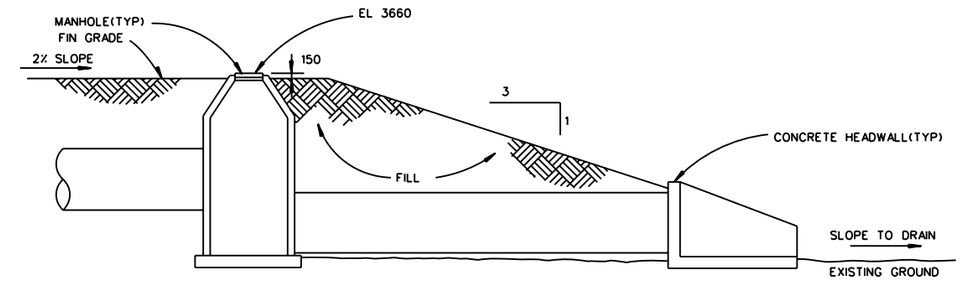

TYPICAL SECTION

SCALE : N.T.S.

NOTE: FURNISH REMOVABLE WIRE SCREEN AT ALL HEADWALL ENTRANCES.

THE UNDERGROUND TRAINER IS NOT INTENDED FOR LIVE-FIRE TRAINING

THIS STATION IS OPTIONAL. IT IS INTENDED FOR BASIC UNDERGROUND TRAINING. THE UNDERGROUND TRAINER ATTACHED TO THE URBAN OFFENSE/DEFENSE BUILDING IS INTENDED FOR MORE ADVANCED TACTICAL TRAINING

AN UNDERGROUND CHAMBER MAY BE ADDED AS AN OPTION

US Army Corps of Engineers

Rev.	Description	Date	Approved

Designed by: | Date: | Rev.
Dwn by: | Ckd by: | Design file no.
Reviewed by: | Drawing code:
Submitted by: | File name: / Plot scale: / Plot date:

U. S. ARMY ENGINEERING AND SUPPORT CENTER, HUNTSVILLE
HUNTSVILLE, ALABAMA

15 SEP 2007

RANGE AND TRAINING LAND PROGRAM
STANDARD DESIGN MANUAL

URBAN ASSAULT COURSE
STATION 5
UNDERGROUND TRAINER

Sheet reference number:
UAC-A-05

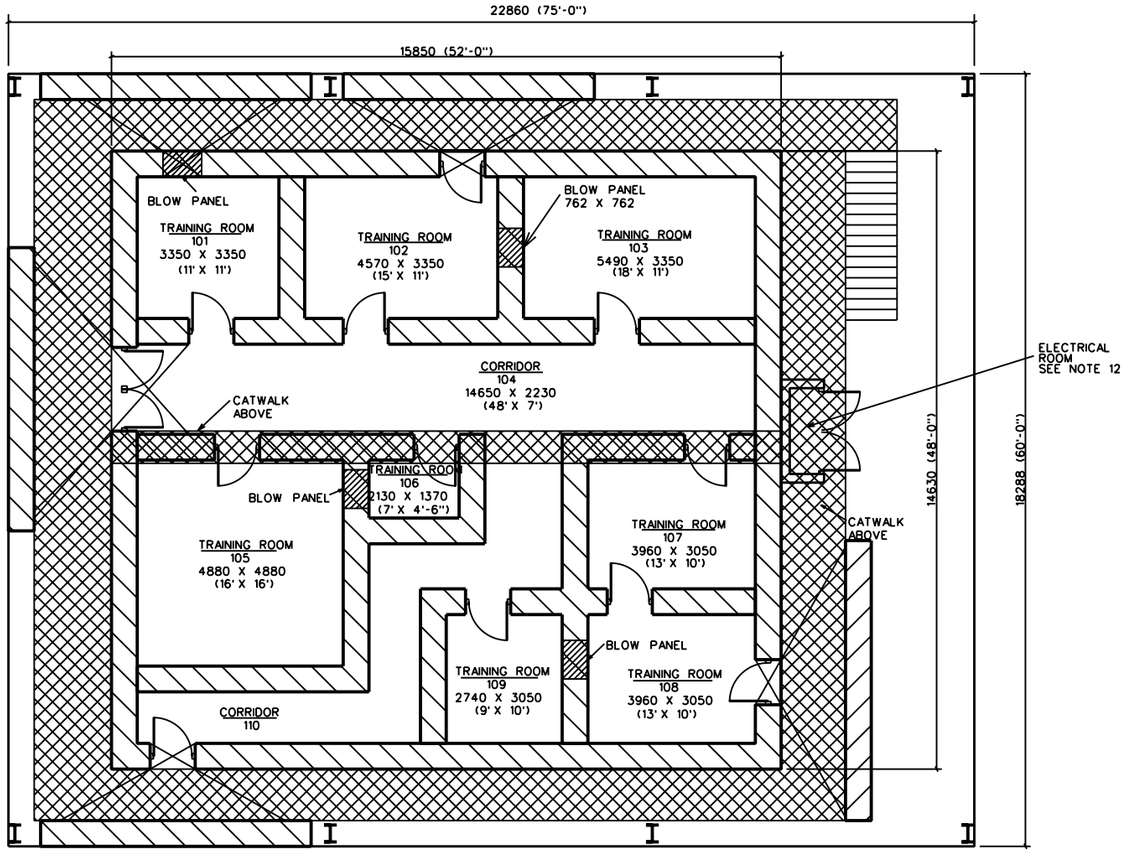

SHOOT HOUSE - FLOOR PLAN

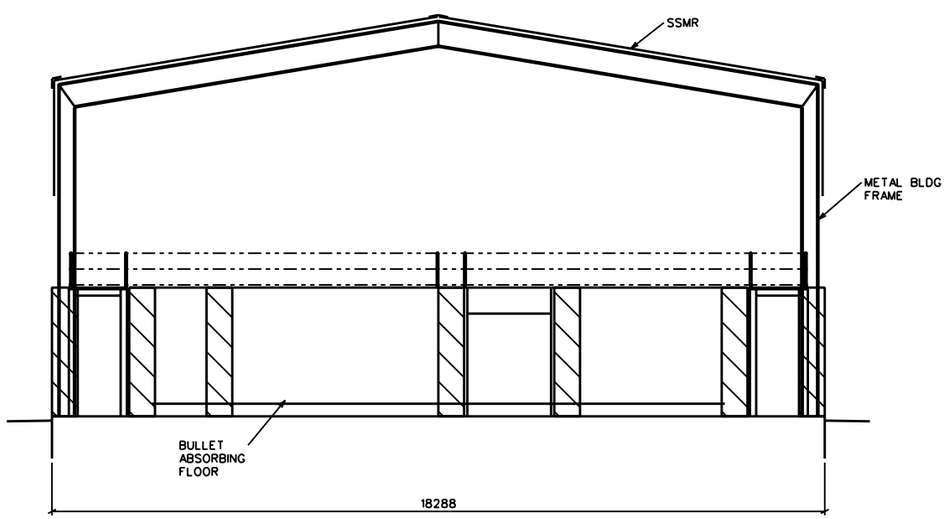

BUILDING SECTION

NOTES

1. The standard shoothouse includes a minimum net training space of approximately 158 square meters (1700sf). The actual size of the facility depends on the thickness of the bullet absorbing material chosen. The standard depicts 610mm (24") thick walls.
The gross area of the shoothouse should be kept to a maximum of 232 square meters (2500sf).
The shoothouse cover should be kept to a maximum of 418 square meters (4500sf).
2. Bullet absorbing wall may be SACON, sand filled wall section or other commercial product designed to stop and contain rounds and ricochets.
3. Seperate bullet traps should be used behind targets to reduce the number of rounds impacting the walls.
4. Bullet absorbing wall system must be designed to be replaceable or repairable.
5. The shoot house is not designed for live fragmentation/concussion grenades.
6. The shoot house must be designed to accommodate the types of mechanical and explosive breaching techniques that will be used.
7. The SDZ of the facility is based on the locations of the firing points and targets, the weapon systems used and the ricochet characteristics of the bullet absorbing walls, a deviation is normally required.
8. The shoothouse must provide a means of stopping and containing rounds exiting through the exterior doors and blow holes in the shoothouse. This may be done using additional bullet absorbing wall material, earth berms, or other method.
9. The layout of the rooms may be changed from the standard in order to support a units particular training tasks.
10. The electrical room and catwalk should be designed so they are not supported by the shoothouse walls to allow panel replacement.
11. The catwalk may be extended over other areas of the shoothouse if needed.
12. The electrical room is 2.032m (6'-8") wide and 0.8128m (2'-8") deep with a 1.8288m (6'-0") wide doors on the front to provide required access to data enclosure and panel board.

MECHANICAL

Ventilation cooling shall be provided for the electrical room. Provide exhaust fan with interlock to motorized louver/damper. Thermostat setpoint for activation of exhaust fan shall be 100 degrees F. Exhaust fan control sequence and thermostat setpoint of 100 degrees F shall be shown on design drawings. Locate fan and louver to optimize cross ventilation in the room.

FIRE PROTECTION

Fire Protection is NOT required per fire codes for this building. Consult local Fire Marshall for compliance with local laws.

BULLET ABSORBING WALL PANEL
SEE NOTE 1

CATWALK

US Army Corps of Engineers

Rev.	Description	Date	Approved

Designed by: | Date: | Rev.
Dwn by: | Ckd by: | Design file no.
Reviewed by: | Drawing code:
Submitted by: | File name: Plot date: Plot scale:

U.S. ARMY ENGINEERING AND SUPPORT CENTER, HUNTSVILLE
HUNTSVILLE, ALABAMA

15 MAY 2007

RANGE AND TRAINING LAND PROGRAM
STANDARD DESIGN MANUAL

SHOOT HOUSE
FLOOR PLAN

Sheet reference number:
SHH-A-1

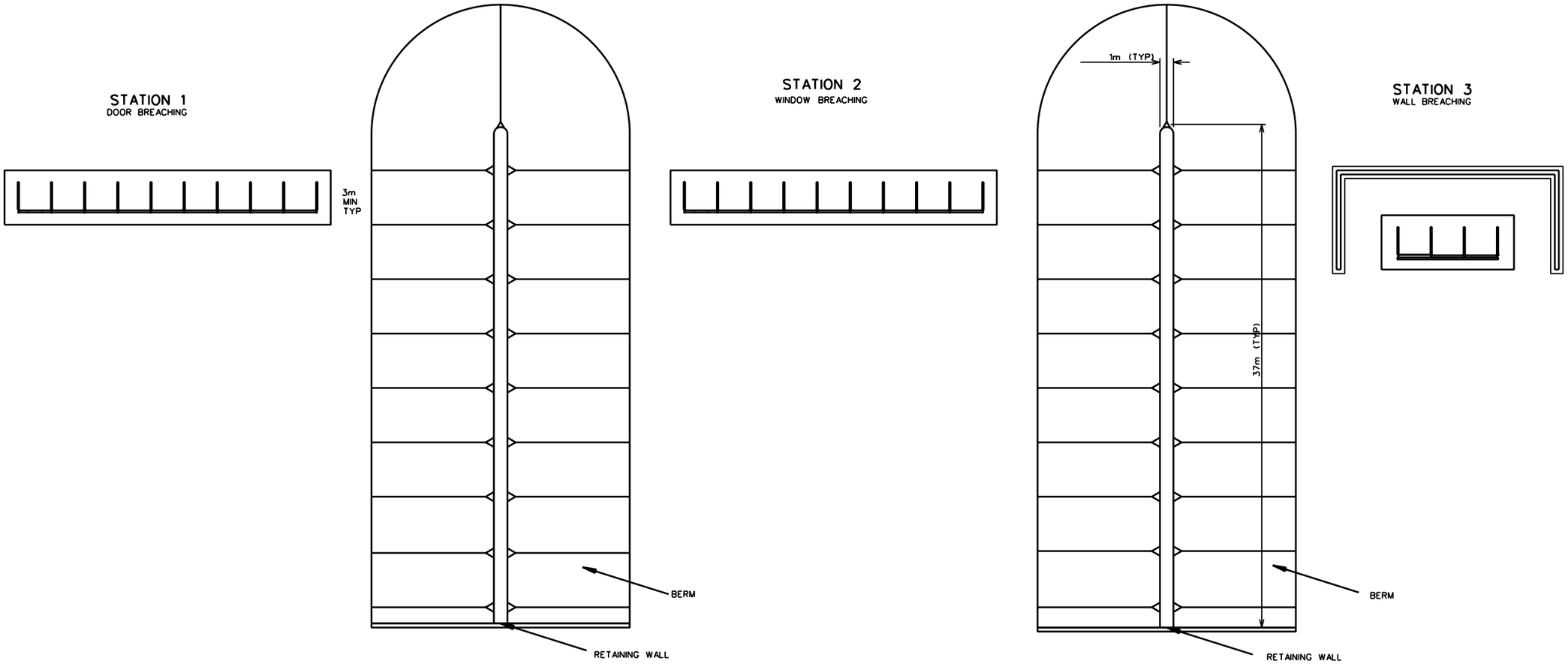

BREACH FACILITY - PLAN VIEW

SCALE : N.T.S.

NOTES:

1. BERMS ARE TO BE 3m HIGH AND 1m WIDE ON TOP
2. SLOPE OF BERMS VARIES DEPENDING UPON SOIL CONDITIONS

US Army Corps of Engineers

Rev #	Description	Date	Approved

Designed by: | Date: | Rev.
Dwn by: | Ckd by: | Design file no.
Reviewed by: | Drawing code:
Submitted by: | File name: Plot date: Plot scale:

U. S. ARMY ENGINEERING AND SUPPORT CENTER, HUNTSVILLE
HUNTSVILLE, ALABAMA

15 APR 2005

RANGE AND TRAINING LAND PROGRAM
STANDARD DESIGN MANUAL

FCC= 17904
BREACH FACILITY
SITE LAYOUT

Sheet reference number:
BCH-C-01

Sheet 1 of

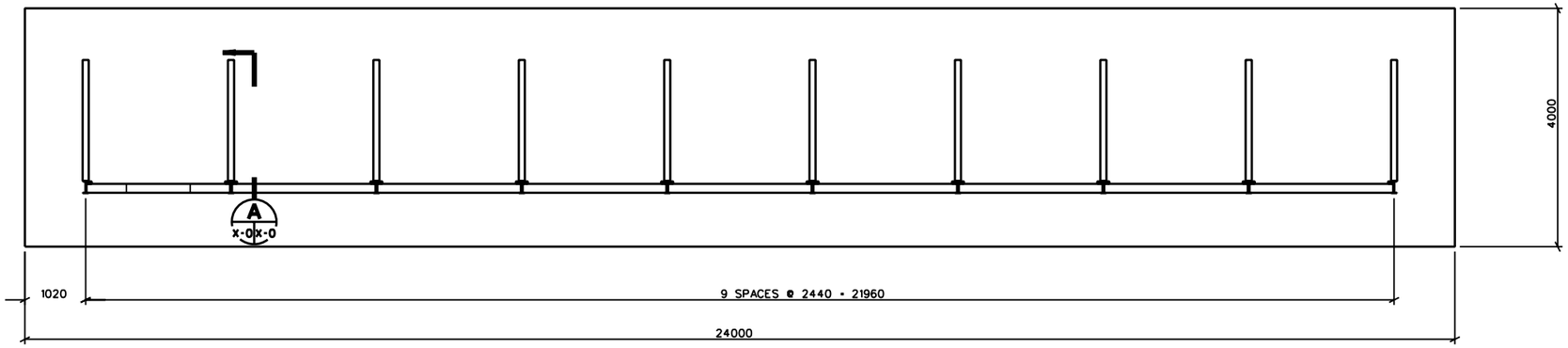

DOOR BREACH - PLAN VIEW
SCALE : 1:50

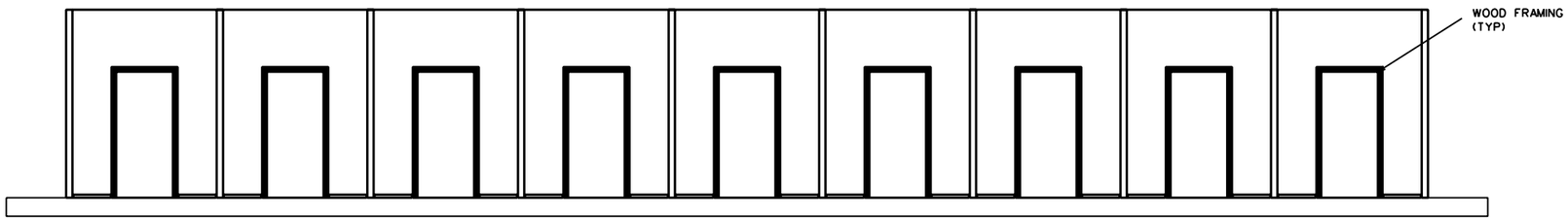

DOOR BREACH - ELEVATION
SCALE : 1:50

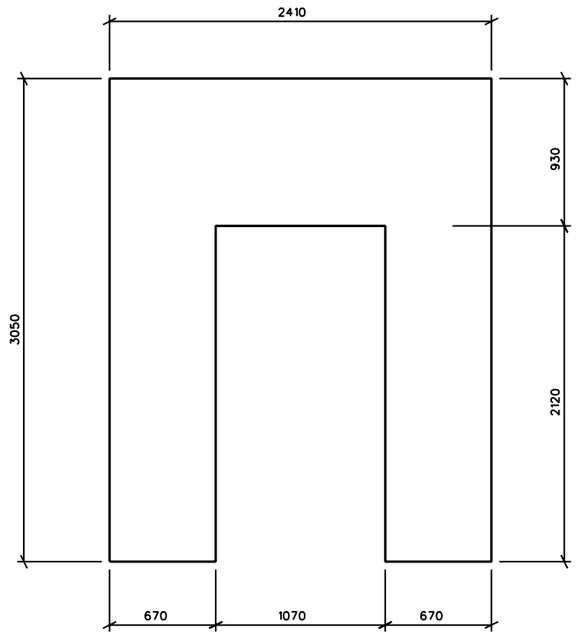

CONCRETE PANEL
SCALE : 1:20

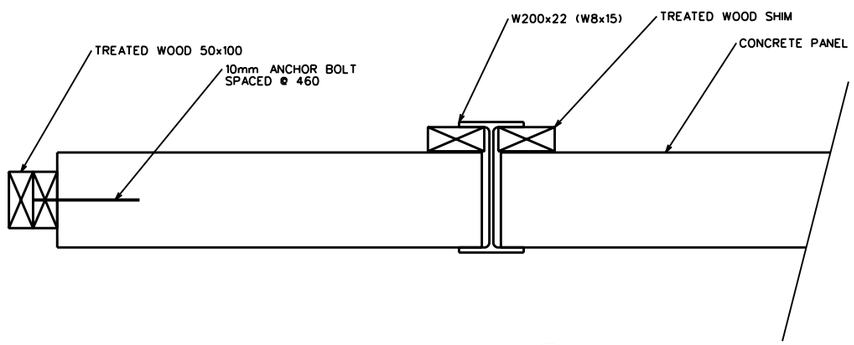

SECTION B
SCALE : 1:10

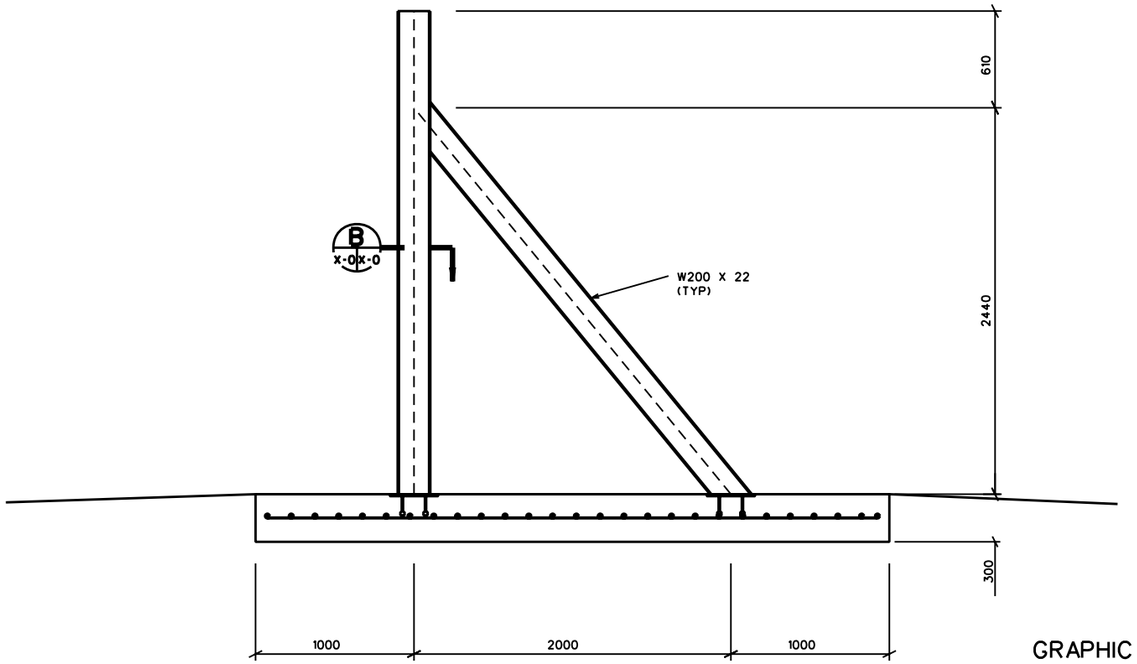

SECTION A
SCALE : 1:20

GRAPHIC SCALES

1:5 — 100 50 0 100 200

1:10 — 200 100 0 200 400

1:50 — 1000 500 0 1000 2000

US Army Corps of Engineers

Rev.	Description	Date	Approved
*			

Designed by: | Date: | Rev.
Dwn by: | Ckd by: | Design file no.
Reviewed by: | Drawing code:
Submitted by: | File name: / Plot date: / Plot scale:

U. S. ARMY ENGINEERING AND SUPPORT CENTER, HUNTSVILLE
HUNTSVILLE, ALABAMA

15 APR 2005

RANGE AND TRAINING LAND PROGRAM
STANDARD DESIGN MANUAL

FCC= 17904
BREACH FACILITY
STATION 1 - DOOR BREACH

Sheet reference number:
BCH-A-01

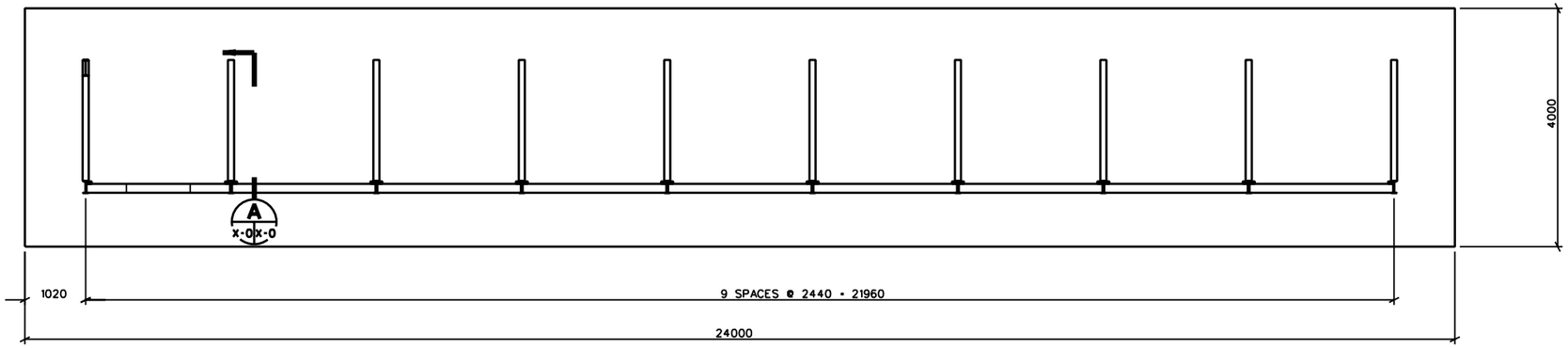

WINDOW BREACH - PLAN VIEW

SCALE : 1:50

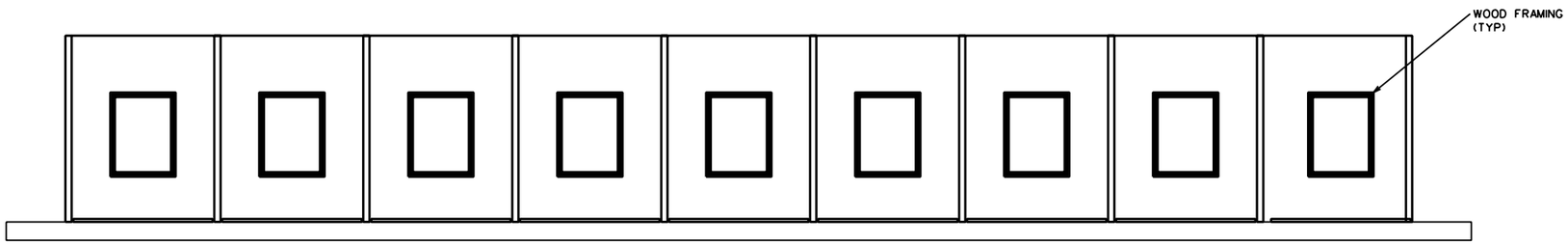

WINDOW BREACH - ELEVATION

SCALE : 1:50

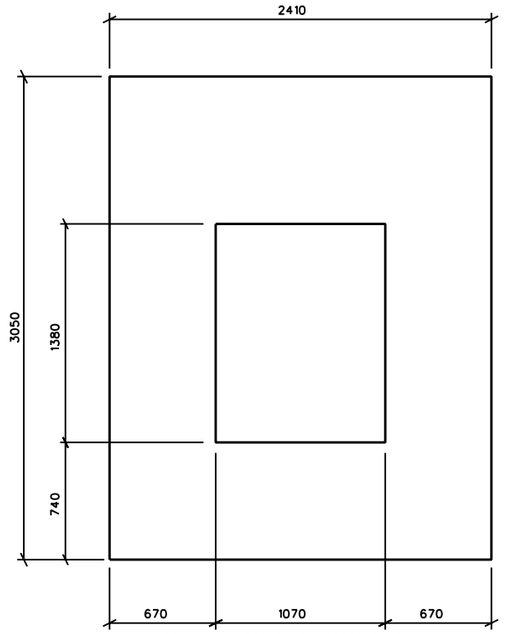

NOTE: WINDOW BREACH CONCRETE PANEL
MAY BE CAST THE SAME AS THE DOOR BREACH
THEN FRAMED IN WITH WOOD

CONCRETE PANEL

SCALE : 1:20

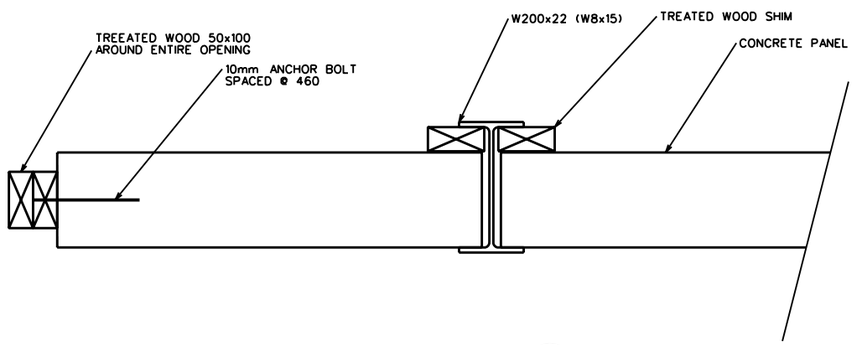

SECTION B x-0x-0

SCALE : 1:10

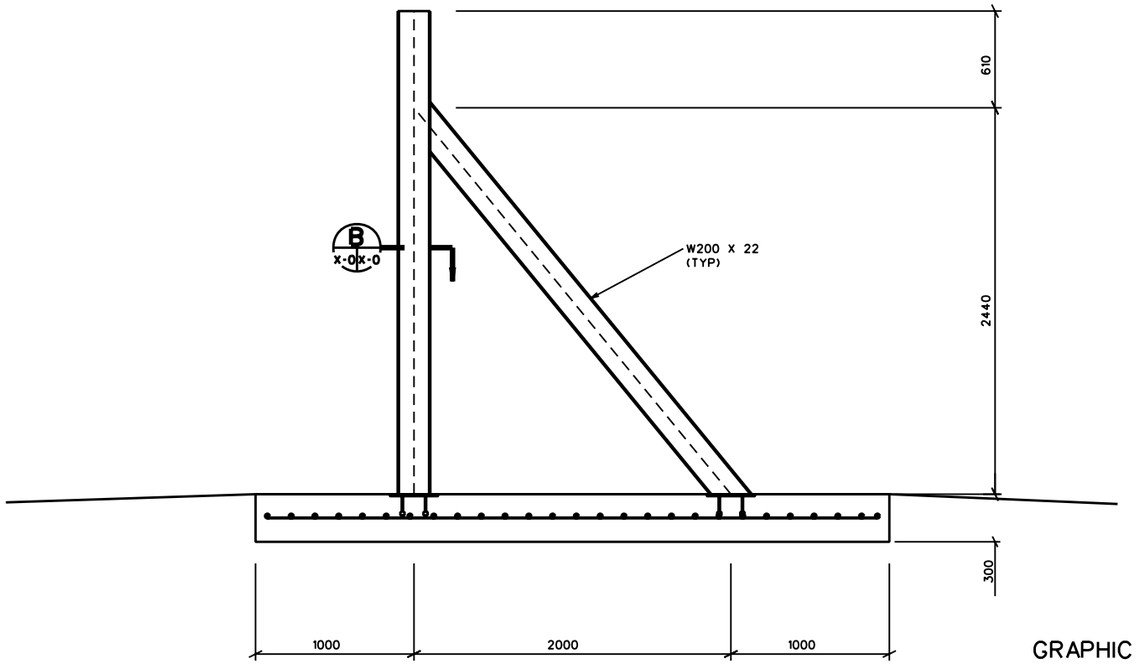

SECTION A x-0x-0

SCALE : 1:20

GRAPHIC SCALES

1:5 — 100 50 0 100 200

1:10 — 200 100 0 200 400

1:50 — 1000 500 0 1000 2000

US Army Corps of Engineers

Rev.	Description	Date	Approved
Rev. *			

Designed by: | Date: | Rev.
Dwn by: | Ckd by: | Design file no.
Reviewed by: | Drawing code:
Submitted by: | File name: / Plot scale: / Plot date:

U. S. ARMY ENGINEERING AND SUPPORT CENTER, HUNTSVILLE
HUNTSVILLE, ALABAMA

15 APR 2005

RANGE AND TRAINING LAND PROGRAM
STANDARD DESIGN MANUAL

FCC: 17904
BREACH FACILITY
STATION 1 - WINDOW BREACH

Sheet reference number:
BCH-A-02

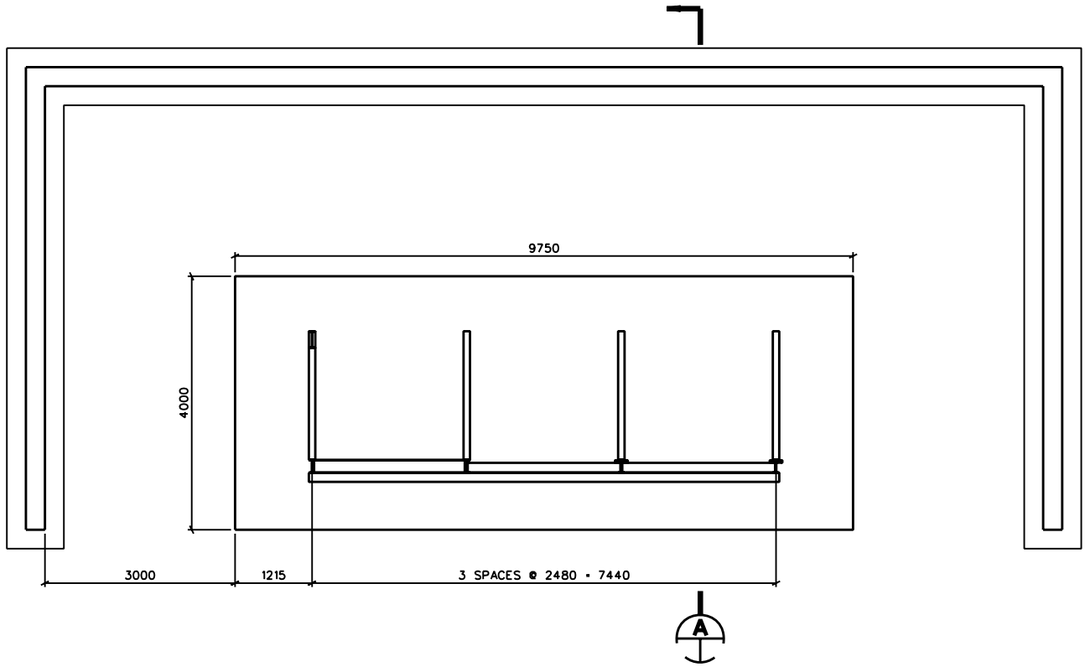

WALL BREACH - PLAN VIEW

SCALE : 1:50

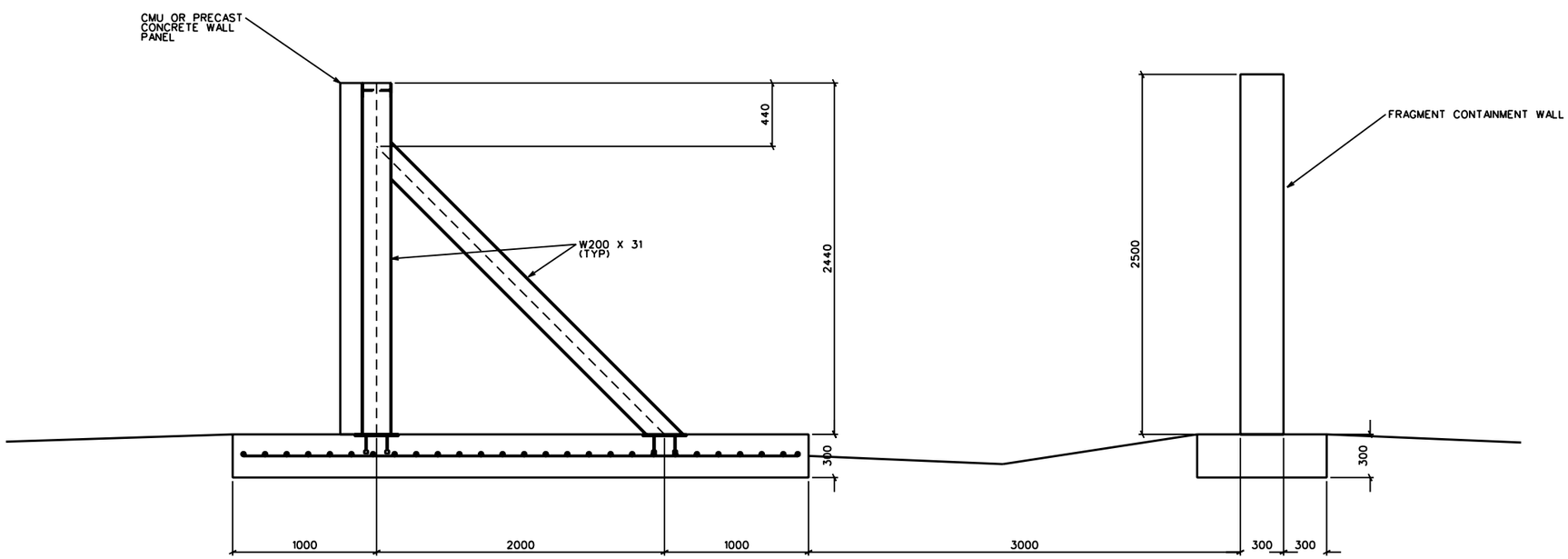

SECTION A

SCALE : 1:20

US Army Corps of Engineers

Rev.	Description	Date	Approved

Designed by:
Dwn by: Ckd by:
Reviewed by:
Submitted by:
Date:
Rev.
Design file no.
Drawing code:
File name:
Plot date:
Plot scale:

U. S. ARMY ENGINEERING AND SUPPORT CENTER, HUNTSVILLE
HUNTSVILLE, ALABAMA

15 APR 2005

RANGE AND TRAINING LAND PROGRAM
STANDARD DESIGN MANUAL

FCC= 17904
BREACH FACILITY
STATION 1 - WALL BREACH

Sheet reference number:
BCH-A-03

COMBINED ARMS COLLECTIVE TRAINING FACILITY (CACTF)

RECOMMENDED TRAINING BUILDINGS

1 School
1 Church/cemetery
1 Police station/Jail
1 Hotel
9 Residences
4 Businesses
1 Townhouse
1 Bank
2 Warehouses
1 Government Building
1 Office
1 Service Station

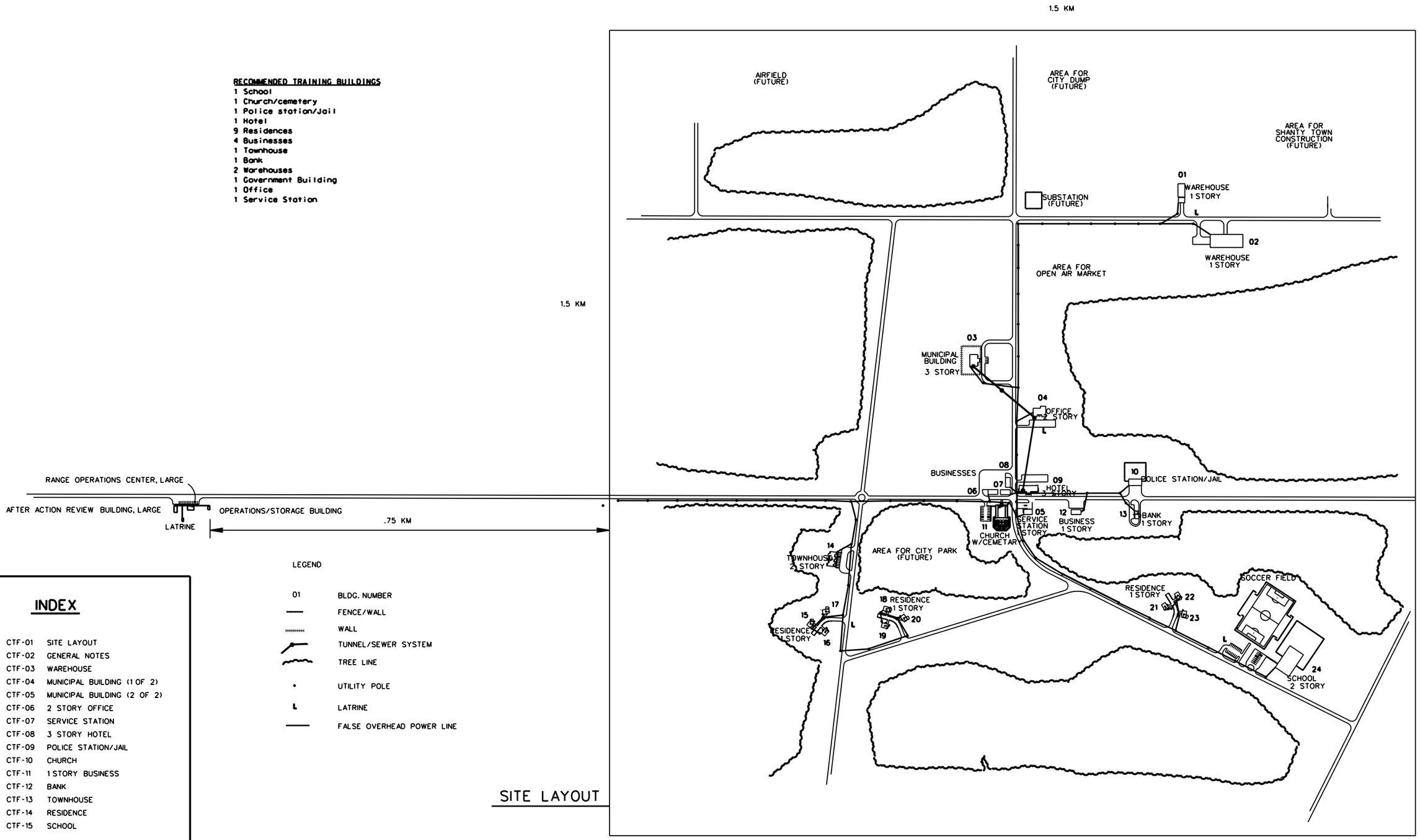

SITE LAYOUT

LEGEND

01	BLDG. NUMBER
—	FENCE/WALL
	WALL
	TUNNEL/SEWER SYSTEM
	TREE LINE
•	UTILITY POLE
L	LATRINE
—	FALSE OVERHEAD POWER LINE

INDEX

CTF-01 SITE LAYOUT
CTF-02 GENERAL NOTES
CTF-03 WAREHOUSE
CTF-04 MUNICIPAL BUILDING (1 OF 2)
CTF-05 MUNICIPAL BUILDING (2 OF 2)
CTF-06 2 STORY OFFICE
CTF-07 SERVICE STATION
CTF-08 3 STORY HOTEL
CTF-09 POLICE STATION/JAIL
CTF-10 CHURCH
CTF-11 1 STORY BUSINESS
CTF-12 BANK
CTF-13 TOWNHOUSE
CTF-14 RESIDENCE
CTF-15 SCHOOL

US Army Corps of Engineers

Rev. *	Description	Date	Approved

Designed by: | Date: | Rev.
Dwn by: | Ckd by: | Design file no.
Reviewed by: | Drawing code:
Submitted by: | File name: | Plot date: | Plot scale:

U. S. ARMY ENGINEERING AND SUPPORT CENTER, HUNTSVILLE
HUNTSVILLE, ALABAMA

1 JUL 2008

RANGE AND TRAINING LAND PROGRAM
STANDARD DESIGN MANUAL

COLLECTIVE TRAINING FACILITY
SITE LAYOUT

Sheet reference number:
CTF-C-01