A.C.B. TIE-IN TO CHANNEL

1"=3'

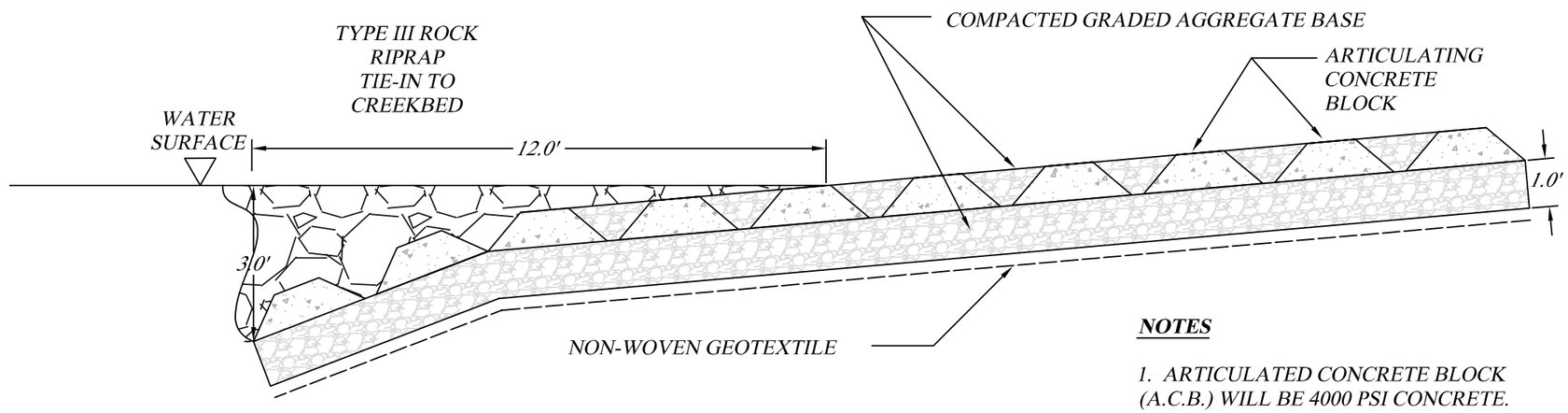

NOTES

1. ARTICULATED CONCRETE BLOCK (A.C.B.) WILL BE 4000 PSI CONCRETE.

2. ALL VOIDS BETWEEN A.C.B.'S WILL BE FILLED WITH COMPACTED G.A.B.

3. G.A.B. WILL BE 1 FOOT THICK AND COMPACTED WITH A LAYER OF GEOTEXTILE UNDERNEATH.

4. CREEK BED WILL HAVE MINIMUM AMOUNT OF DISTURBANCE WHEN PLACING TYPE III ROCK RIPRAP FOR ENTRANCE AND EXIT ONTO TANK TRAIL.

5. REPEAT ON OPPOSITE BANK OF CREEK OR STREAM.

6. CENTER OF CHANNEL BED BETWEEN CABLE CONCRETE MATS SHOULD BE HARDENED WITH STONE BASE (IE. TYPE I RIP RAP).

REVISIONS		
DATE	APPROVED	TITLE

9C0520000001K2-006-0

STANDARD DWG. NO.

DATE: 11/2006 | SHEET 6 OF 24

		Date
Designed	S.J. Blackston	11/2006
Drawn	S.J. Blackston	11/2006
Checked	CEJ/GMG	11/2006
Approved	G.M. GRIMM	11/2006

MILITARY ENVIROMENTAL TECHNOLOGY DEMO CENTER
ABERDEEN TEST CENTER

ENVIRONMENTAL QUALITY TECHNOLOGY PROGRAM, A(2.5.E) SUSTAINABLE ARMY LIVE-FIRE RANGE DESIGN AND MAINTENANCE

LOW WATER STREAM CROSSING

CABLE CONCRETE LOW WATER STREAM CROSSING PARTIAL CHANNEL WIDTH

ARMY Environmental Quality Technology Program

File Name: 9C0520000001K2-006-0

Project Designation: 9C0520000001K2

11/2006

Sheet 6 of 24