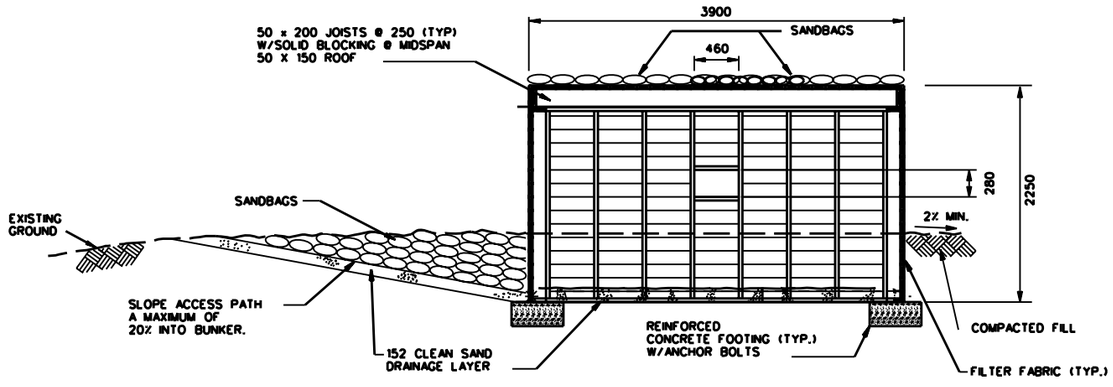

SECTION A C-10 C-10

SCALE : N.T.S.

GENERAL NOTES:

1. WALLS AND ROOF SHALL BE CONSTRUCTED OF TREATED TIMBERS. FILTER FABRIC SHALL BE INSTALLED ABOVE ROOF AND BEHIND ALL WOOD WALLS BELOW GRADE.
2. AREAS DISTURBED BY CONSTRUCTION ACTIVITIES SHALL BE REVEGETATED OR RESURFACED CONSISTENT WITH THE NATURAL SURROUNDINGS. GROUND COVER SHALL NOT REDUCE BUNKER VISIBILITY.
3. ALL DIMENSIONS ARE mm UNLESS OTHERWISE INDICATED
4. CONCRETE SHALL DEVELOP A MINIMUM COMPRESSIVE STRENGTH OF 28 MPa IN 28 DAYS.

NOTES TO DESIGNER:

1. PROVIDE A SUBDRAIN SYSTEM TO ENSURE ADEQUATE DRAINAGE OF BUNKER.
2. THE NEED FOR FILTER FABRIC SHOULD BE EVALUATED AS PART OF THE SITE ADAPTION PROCESS. A FILTER LAYER MAY OR MAY NOT BE REQUIRED DEPENDING UPON THE SOIL TYPE AT A PARTICULAR SITE.
3. THIS GENERIC DESIGN FOR THE BUNKER MUST BE SITE ADAPTED TO SPECIFIC SITE CONDITIONS DETERMINED BY A SUBSURFACE INVESTIGATION AND A TOPOGRAPHIC SURVEY.
4. SANDBAGS SHOULD BE MADE OF A MILDEW RESISTANT MATERIAL.
5. DEPTH OF FOOTING WILL VARY DEPENDING UPON SUBSURFACEINVESTIGATION AND COMPACTION REQUIREMENTS DURING CONSTRUCTION.
6. DESIGNER MUST VERIFY STRUCTURAL DESIGN BASED ON LOCAL CONDITIONS

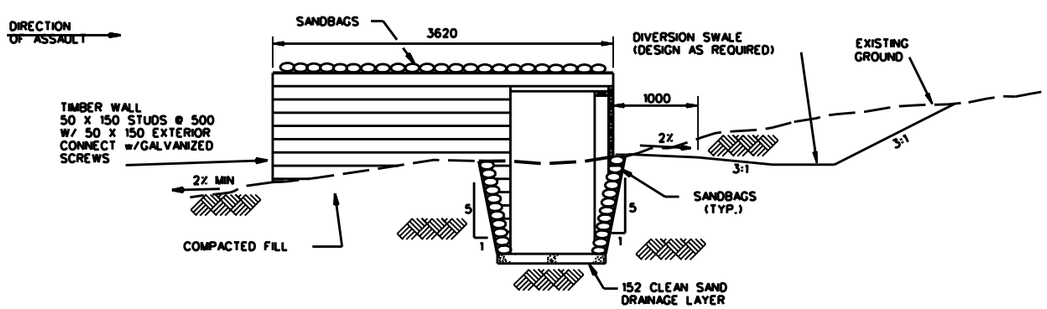

SECTION B C-10 C-10

SCALE : N.T.S.

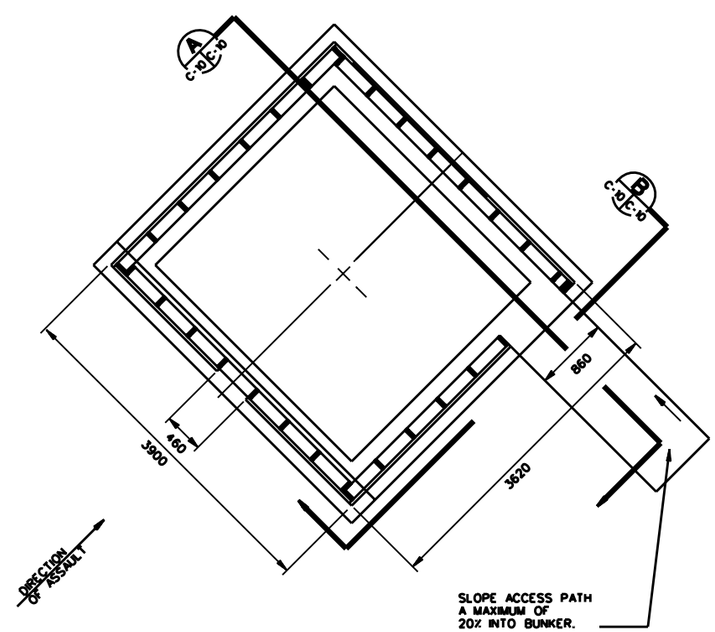

PLAN-OBSERVATION BUNKER

SCALE: N.T.S.

US Army Corps of Engineers

Rev.	Description	Date	Approved

Designed by: | Date: | Rev.
Dwn by: | Ckd by: | Design file no.
Reviewed by: | Drawing code:
Submitted by: | File name: Plot date: Plot scale:

U. S. ARMY ENGINEERING AND SUPPORT CENTER, HUNTSVILLE
HUNTSVILLE, ALABAMA

30 MAY 2006

RANGE AND TRAINING LAND PROGRAM
STANDARD DESIGN MANUAL

MACHINE GUN/OBSERVATION BUNKER

Sheet reference number:
CD-10

Sheet of