NOTES TO DESIGNERS:

1. THESE ARE EXAMPLES OF POSSIBLE SOLUTIONS FOR THE MTDP AND TDP EQUIPMENT. ALTERNATIVE INSTALLATION METHODS MAY BE PROVIDED SO LONG AS FUNCTIONAL REQUIREMENTS FOR THE MTDP AND TDP DEFINED IN THIS MANUAL ARE MET.
2. THIS EXAMPLE SHOWS ALL EQUIPMENT THAT CAN BE REQUIRED IN A MTDP. ALL MTDP'S WILL NOT REQUIRE ALL OF THIS EQUIPMENT. EQUIPMENT REQUIRED IS DEPENDANT ON TYPE AND LOCATION OF TARGET EMPLACEMENT.
3. RECOMMEND NOT TO EXCEED THE COMBINATION OF 3 - CAT 5E AND 2 - 6 STRAND FIBER OPTIC CABLES ENTERING THE MASTER TARGET DATA PANEL.
4. DESIGNER SHALL PROVIDE ALL SIZES FOR ALL CONDUITS ENTERING THE MASTER TARGET DATA PANEL ON ALL CONTRACT DRAWINGS.
5. THIS SHEET DEPICTS FUSION SPLICES IN THIS MASTER TARGET DATA PANEL. DESIGNER MAY ELECT TO TERMINATE ALL FIBER OPTIC CABLES IN EVERY BOX IN LIEU OF FUSION SPLICES.
6. THE EXAMPLE FOR THE TDP ON THIS SHEET IS OF A TDP USED IN A SIT CLUSTER SLAVE EMPLACEMENT. THERE MAY BE OTHER USES FOR A TDP WHERE THE EQUIPMENT VARIES FROM WHAT IS SHOWN ON THIS SHEET.

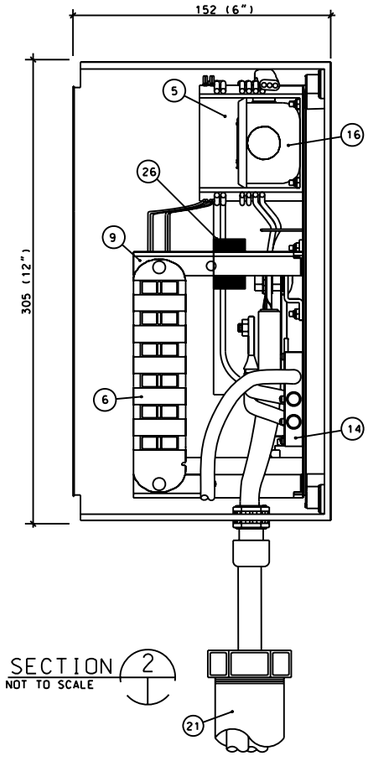

SECTION 2
NOT TO SCALE

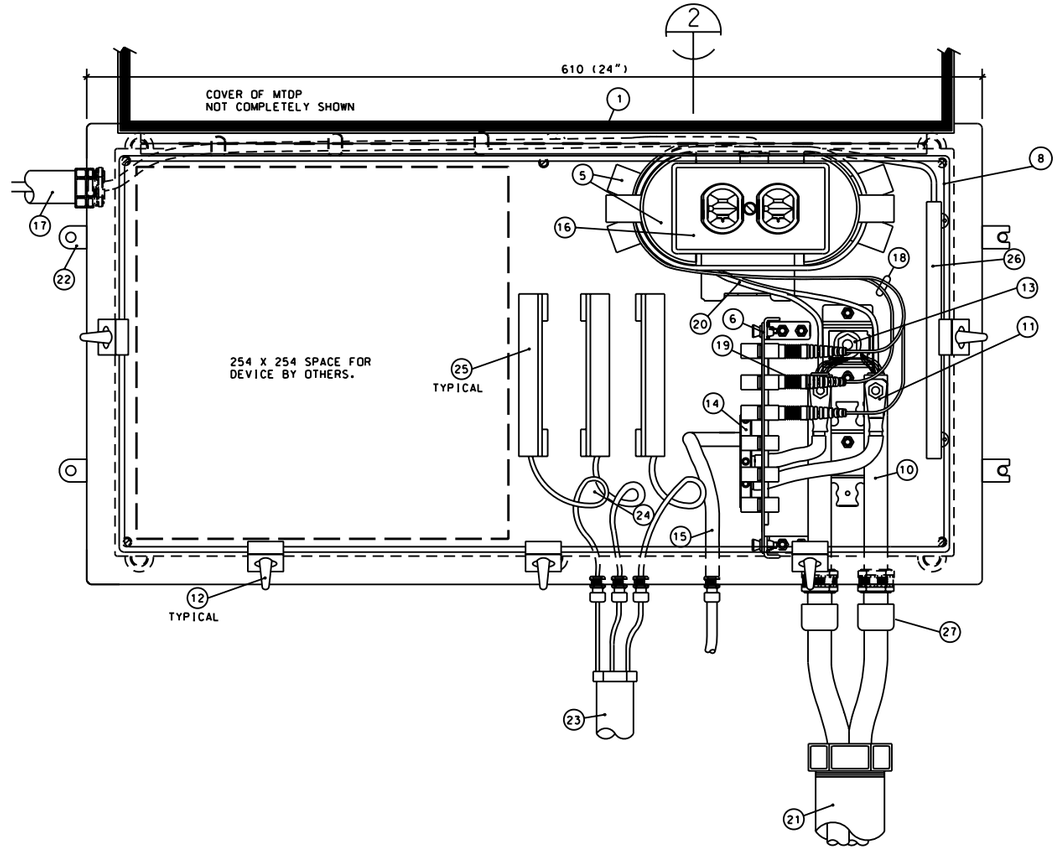

1 TYPICAL MASTER TARGET DATA PANEL (MTDP) DETAIL
NOT TO SCALE

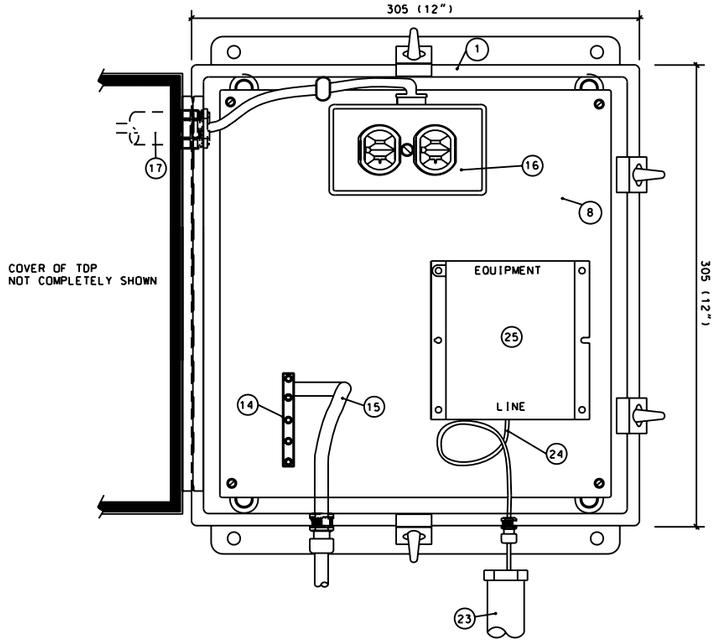

3 TYPICAL TARGET DATA PANEL (TDP) DETAIL
NOT TO SCALE

KEYED NOTES:

1. ENCLOSURE SHALL BE 16 GAUGE MINIMUM GALVANIZED STEEL SHEET METAL WITH A WALL MOUNT BRACKET. ENCLOSURE SHALL CARRY A NEMA 4 RATING. MTDP-A24H12ALP HOFFMAN TYPE ENCLOSURE OR EQUAL. PROVIDE WITH FAST OPERATING CLAMP ASSEMBLY (AFC412SS OR EQUAL). TDP-A1212CHNF HOFFMAN TYPE ENCLOSURE OR EQUAL. PROVIDE WITH FAST OPERATING CLAMP ASSEMBLY.
2. HINGED, CLAMP-ON, OR BOLT-ON COVER WITH CORROSION-RESISTANT STAINLESS STEEL CAPTIVE SCREWS/CLAMPS.
3. SEAMLESS FOAM-IN-PLACE GASKET FOR A WATERTIGHT AND DUST-TIGHT SEAL.
4. CABLE IDENTIFICATION DIRECTORY
5. RADIUS CONTROL GUIDES
6. INJECTION-MOLDED PLASTIC CONNECTOR 12-PORT PATCH PANEL FOR FIELD INSTALLABLE CONNECTORS. 6-PORT CAN BE USED IF ONLY ONE SIX STRAND ENTERS THE ENCLOSURE.
7. PROVIDE PERMANENT LABELS ON INCOMING AND EXITING CABLES IDENTIFYING DESTINATIONS.
8. METAL BASE PLATE TO SECURE COMPONENTS INSIDE ENCLOSURE
9. CONNECTOR PANEL SUPPORT BRACKETS
10. ONE OR TWO 6-STRAND ARMORED TYPE FIBER OPTIC CABLE(S). PREPARE CABLE AND INSTALL A SHEATH RETENTION CLAMP. SECURE CABLE TO SHEATH RETENTION BRACKET.
11. METALLIC CABLE SHEATH GROUNDING CLAMP AND GROUNDING CONNECTOR
12. CLAMPS WITH FAST OPERATING ASSEMBLY
13. CENTRAL MEMBER STRAIN-RELIEF BRACKET WASHER AND HEX NUTS
14. GROUND BAR - SECURE TO METAL BASE PLATE
15. #6 AWG, 600 VOLT GROUNDING CONDUCTOR ROUTED TO GROUND ROD
16. DUPLEX RECEPTACLE (DPR-DATA POWER RECEPTACLE) - 20 AMP, 125 VOLT, 2 POLE, 3 WIRE GROUNDING TYPE IN A STANDARD SINGLE-GANG METAL BOX AND GALVANIZED STEEL DEVICE PLATE
17. 2/C #12 WITH GROUND TYPE "SO" CORD IN A CONDUIT FROM CIRCUIT BREAKER PANELBOARD FOR 120 VOLT, 1-PHASE SERVICE TO DUPLEX RECEPTACLE. RECEPTACLE SHALL NOT BE FED FROM ANY GROUND FAULT INTERRUPTING DEVICE.
18. FIBER TERMINATIONS, TERMINATE ALL STRANDS WITH "SC" CONNECTORS. ONLY 4 STRANDS OF FIBER ARE REQUIRED TO BE TERMINATED AT EACH EMPLACEMENT. 2 STRANDS MAY BE SPLICED AND CARRIED ONTO NEXT EMPLACEMENT IN DATA CIRCUIT. ALL 6 STRANDS SHALL BE TERMINATED WHEN ONLY ONE FIBER OPTIC CABLE ENTERS MASTER TARGET DATA PANEL.
19. FIELD INSTALLABLE "SC" TYPE CONNECTORS WITH BEND PROTECTOR. ALL CONNECTORS NOT SHOWN FOR CLARITY.
20. FIBER OPTIC CABLE BUFFER TUBES WITH 6-STRANDS OF FIBER EACH.
21. CONDUIT WITH DUCT SEALANT FOR FIBER OPTIC CABLES, CONDUIT SHALL END AS CLOSE AS POSSIBLE TO CABLE SEAL FITTINGS.
22. PROVIDE MOUNTING TABS. SCREWS THROUGH THE BACK FROM INSIDE OF THE ENCLOSURE IS NOT AN ACCEPTABLE MOUNTING METHOD.
23. CONDUIT WITH DUCT SEALANT FOR DIRECT BURIAL SHIELDED CATEGORY 5E CABLES, CONDUIT SHALL END AS CLOSE AS POSSIBLE TO CABLE SEAL FITTINGS.
24. DIRECT BURIAL GRADE CATEGORY 5E SHIELDED CABLES TO OTHER MASTER TARGET DATA PANELS. COIL 305 SLACK IN MTDP AND PROVIDE STRAIN RELEIF. BOND CABLE SHIELD TO BASE PLATE GROUND. GROUNDING OF SHIELD NOT SHOWN SINCE CABLE MANUFACTURERS USE DIFFERENT METHODS.
25. CAT5E CABLE SURGE PROTECTOR WITH 16V CLIPPING VOLTAGE. TERMINATE LINE SIDE ON 110 BLOCK AND PROVIDE EQUIPMENT SIDE WITH MALE RJ45 CONNECTOR JUMPER. JUMPER NOT SHOWN IN DESIGN. SURGE PROTECTORS MAY BE MOUNTED VERTICALLY ON BRACKETS IF NEEDED TO CONSERVE SPACE.
26. OPTIONAL FUSION SPLICE TRAY. ONLY REQUIRED IF FIBER STRANDS ARE SPLICED.
27. PROVIDE CABLE SEAL FITTINGS AROUND CABLES ENTERING BOX FROM UNDERGROUND. TYPICAL FOR ALL CABLE ENTERING MASTER TARGET DATA PANEL. SEE ED-01 FOR CABLE SEAL FITTING DETAIL.

US Army Corps of Engineers

Rev.	Description	Date	Approved

Designed by: | Date: | Rev.
Dwn by: | Ckd by: | Design file no.
Reviewed by: | Drawing code:
Submitted by: | File name: Pw code: Pw level:

U. S. ARMY ENGINEERING AND SUPPORT CENTER, HUNTSVILLE
HUNTSVILLE, ALABAMA

20 FEBRUARY 2008

RANGE AND TRAINING LAND PROGRAM
STANDARD DESIGN MANUAL

MASTER TARGET DATA PANEL EXAMPLE

Sheet reference number:
ED-06

Sheet of