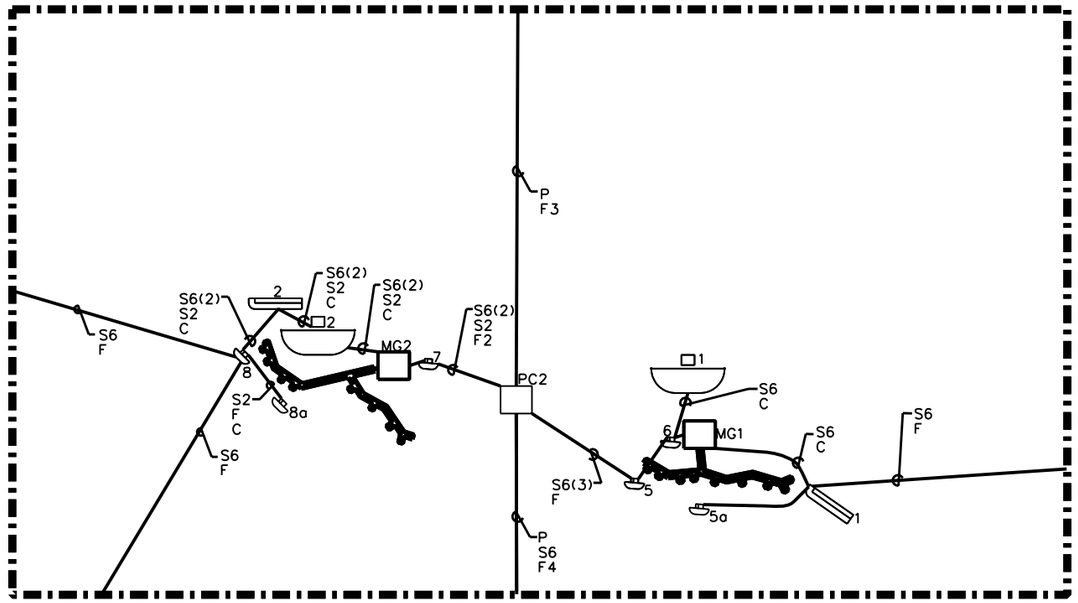

OBJECTIVE B

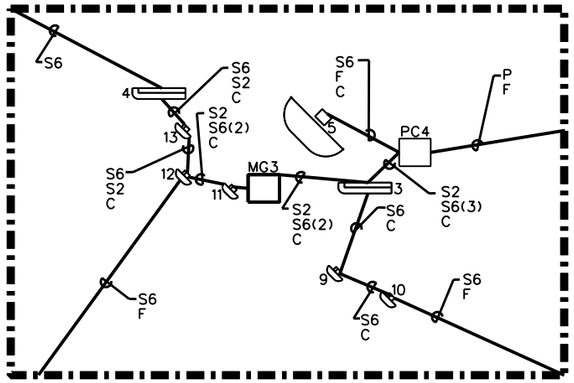

OBJECTIVE D

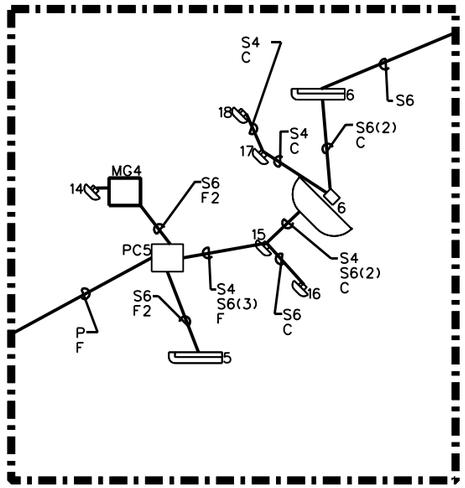

OBJECTIVE E

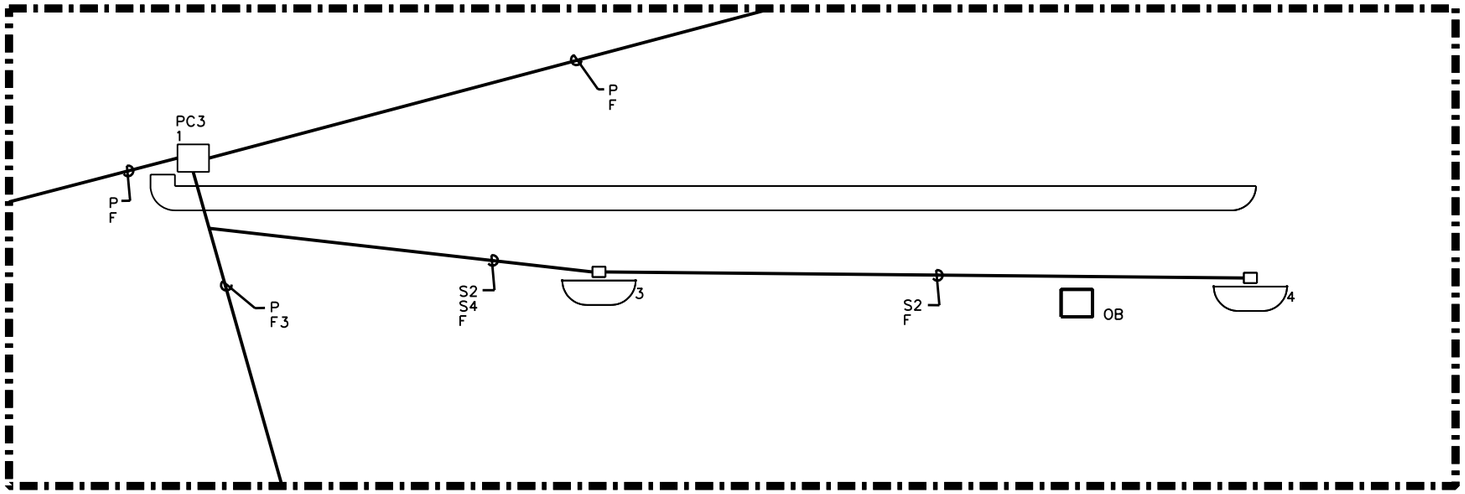

OBJECTIVE C

US Army Corps of Engineers

Rev.	Description	Date	Approved
*			

Designed by: | Date: | Rev.
Dwn by: | Ckd by: | Design file no.
Reviewed by: | Drawing code:
Submitted by: | File name: / Plot date: / Plot scale:

U. S. ARMY ENGINEERING AND SUPPORT CENTER, HUNTSVILLE
HUNTSVILLE, ALABAMA

15 APR. 2005

RANGE AND TRAINING LAND PROGRAM
STANDARD DESIGN MANUAL

FCC: 17895
INFANTRY SQUAD BATTLE COURSE
ELECTRICAL POWER AND DATA LAYOUT

Sheet reference number:
ISB-E-02

Sheet of