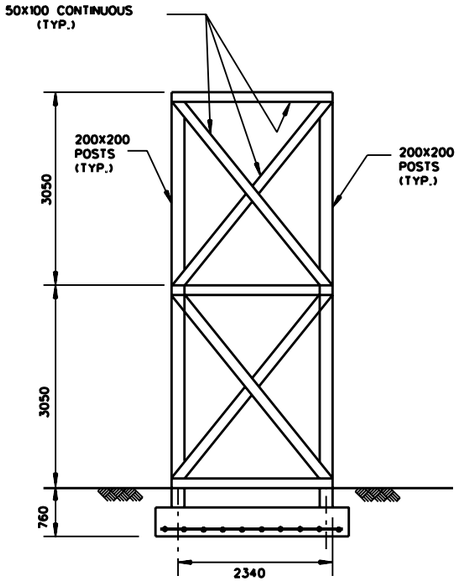

NOTE: USE 2 - 13 x 100 LAG BOLTS @ EACH JOINT

BRACED BENT & FOOTING VIEW (G)

SCALE : N.T.S.

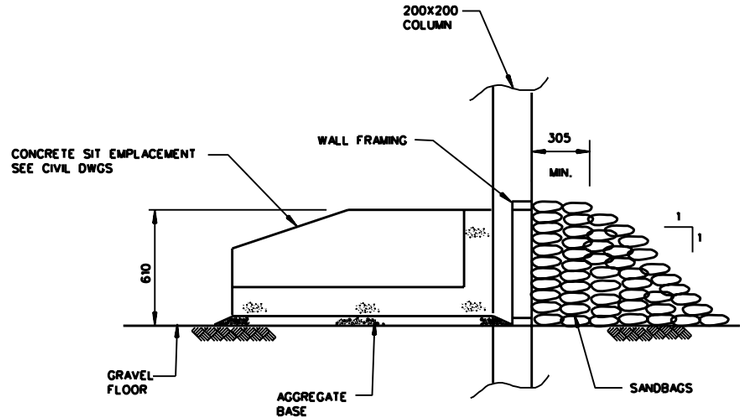

SECTION (F)

SCALE : N.T.S.

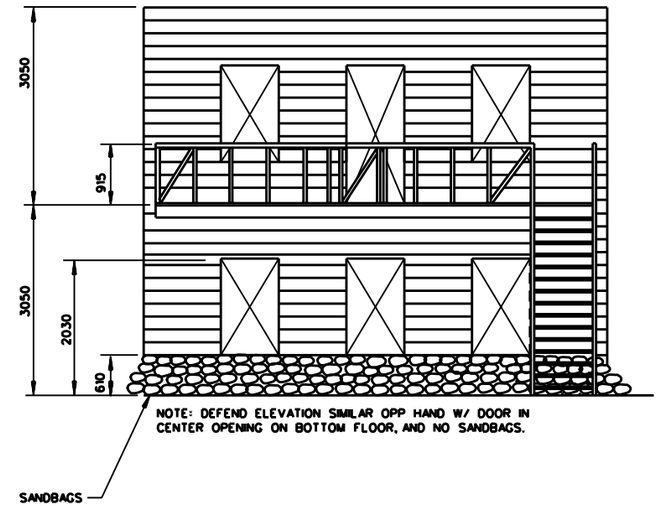

NOTE: DEFEND ELEVATION SIMILAR OPP HAND W/ DOOR IN CENTER OPENING ON BOTTOM FLOOR, AND NO SANDBAGS.

ASSAULT SIDE ELEVATION (A)

SCALE : N.T.S.

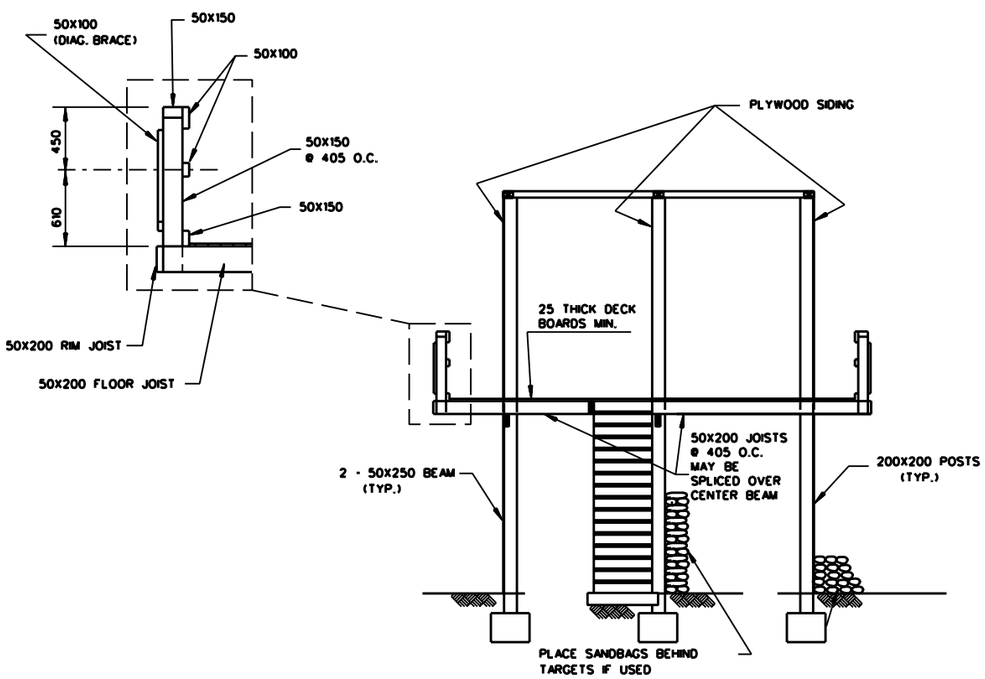

NOTE: WALL FRAMING NOT SHOWN FOR CLARITY

SECTION (D)

SCALE : N.T.S.

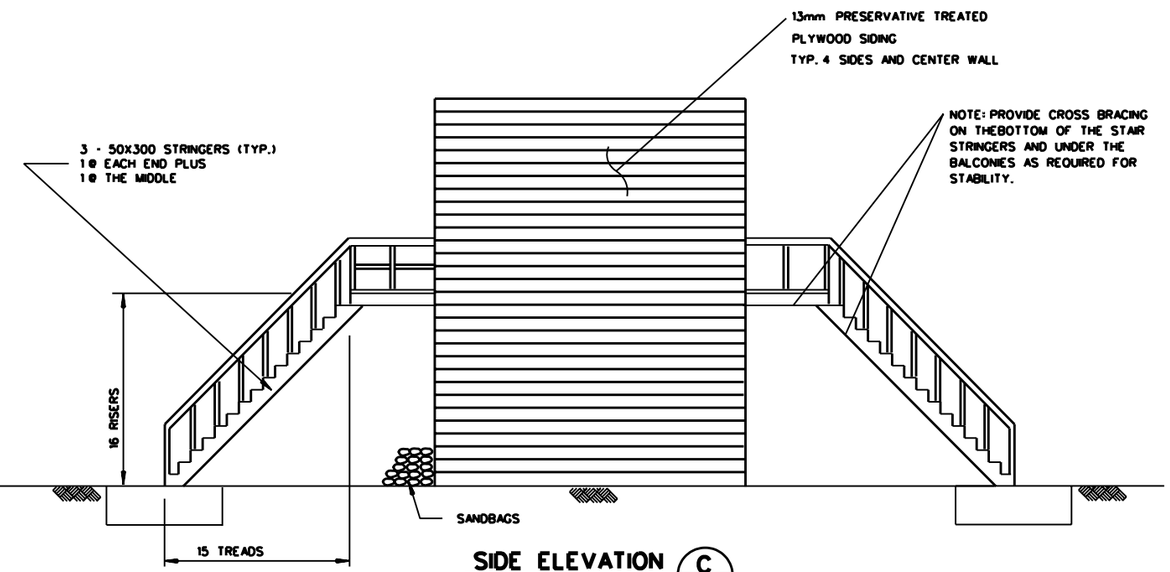

SIDE ELEVATION (C)

SCALE : N.T.S.

NOTE: 2 - 50X150 TREADS.
NO RISER BOARDS REQUIRED.
DIMENSIONS TYPICAL ALL STAIRS.

US Army Corps of Engineers

Rev.	Description	Date	Approved

Designed by: | Date: | Rev.
Dwn by: | Ckd by: | Design file no.
Reviewed by: STD | Drawing code: 79-90-01
Submitted by: | File name: | Plot date: | Plot scale:

U. S. ARMY ENGINEERING AND SUPPORT CENTER, HUNTSVILLE
HUNTSVILLE, ALABAMA

14 APR, 2005

RANGE AND TRAINING LAND PROGRAM
STANDARD DESIGN MANUAL

ASSAULT/DEFEND HOUSE (2 OF 2)

Sheet reference number:
IPB-A-02