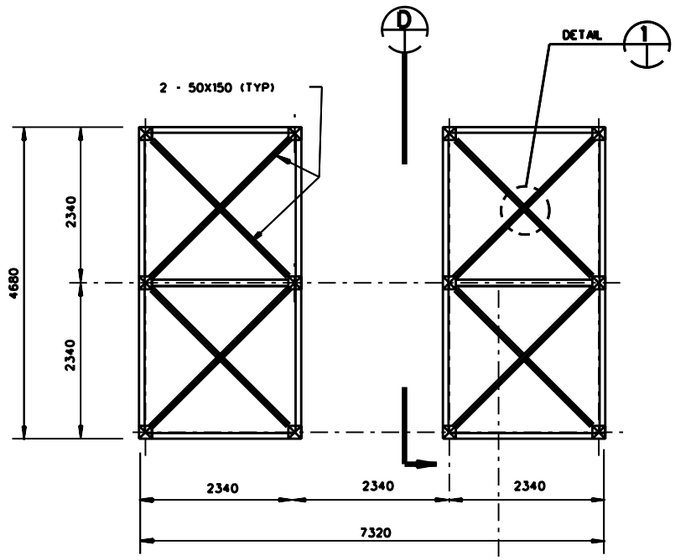

ROOF FRAMING PLAN
SCALE : N.T.S.

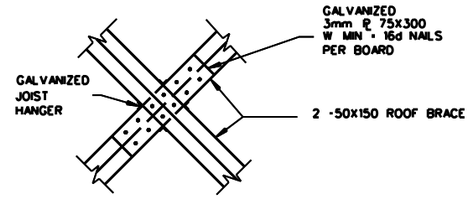

DETAIL 1
SCALE : N.T.S.

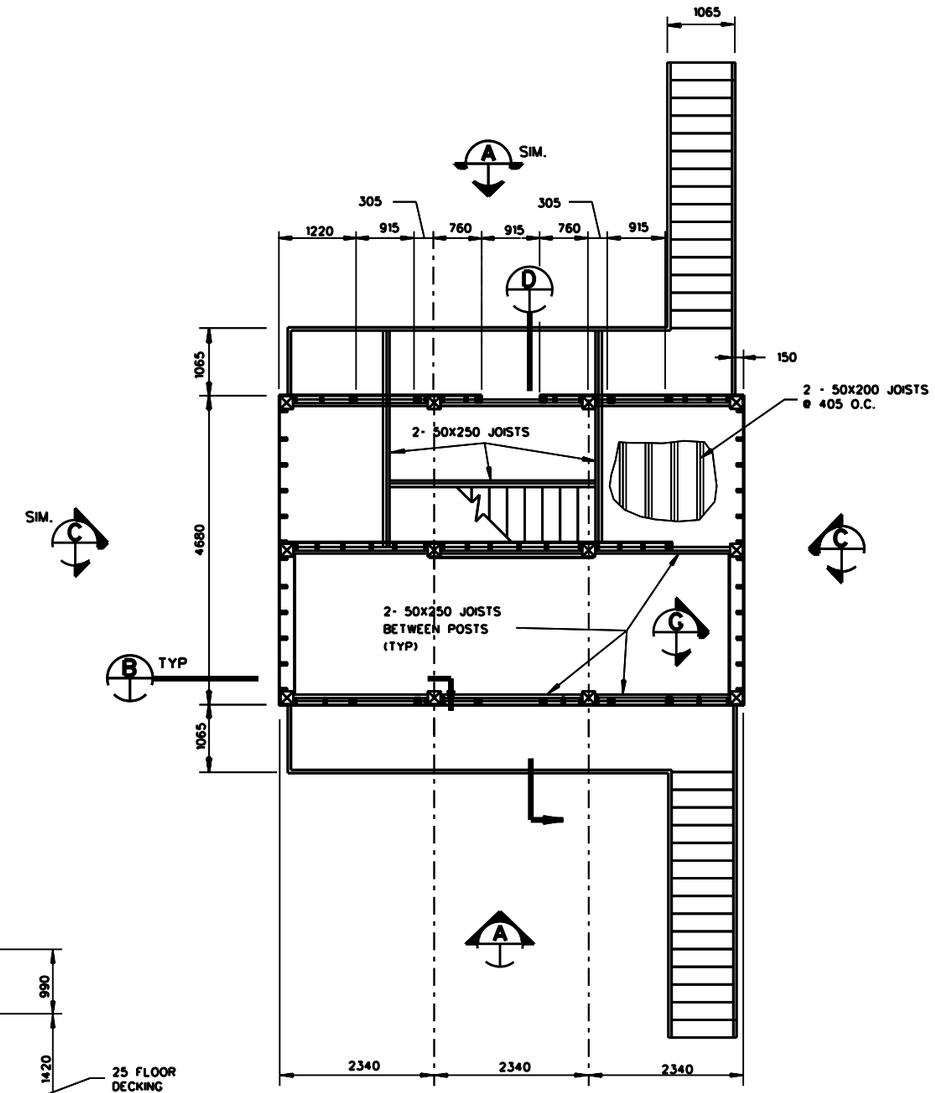

SECOND FLOOR PLAN
SCALE : N.T.S.

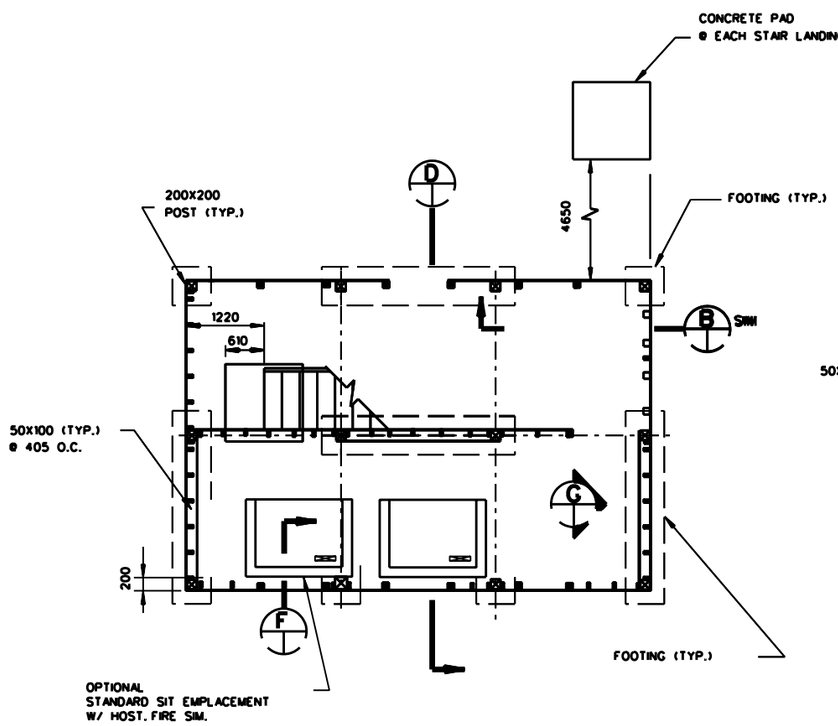

FOUNDATION/FIRST FLOOR PLAN
SCALE : N.T.S.

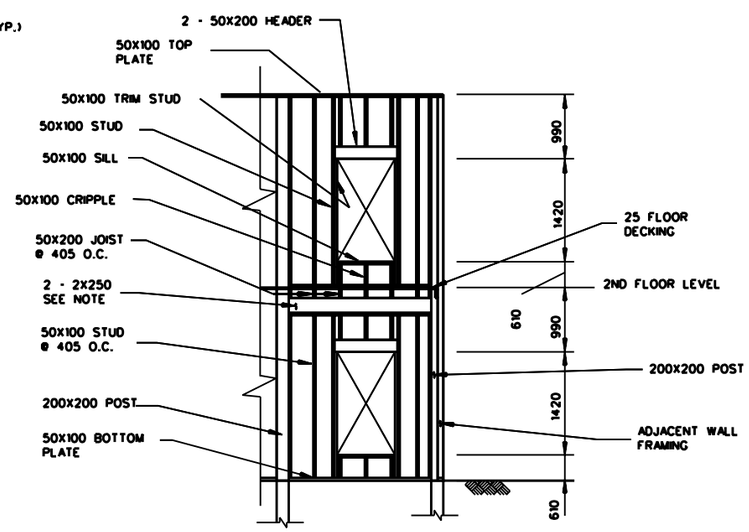

NOTE: 2 - 50X250 BEAM SPANS BETWEEN 200X200 POSTS WITH A JOIST HANGAR AT EACH END. THE BEAM SUPPORTS THE SECOND FLOOR WALL AND DOES NOT BEAR ON FIRST FLOOR WALL FRAMING. THIS ALLOWS WALL SECTIONS TO BE REPLACED WHEN SHOT-UP.

SECTION B
SCALE : N.T.S.

US Army Corps of Engineers

Rev.	Description	Date	Approved

Designed by: | Date: | Rev.
Dwn by: | Ckd by: | Design file no.
Reviewed by: | Drawing code: 79-90-D S10
Submitted by: | File/Drawing no. | Rev date: | Rev. code:

U.S. ARMY ENGINEERING AND SUPPORT CENTER, HUNTSVILLE
HUNTSVILLE, ALABAMA

15 APR, 2005

RANGE AND TRAINING LAND PROGRAM
STANDARD DESIGN MANUAL

ASSAULT/DEFEND HOUSE (1 OF 2)

Sheet reference number:
IPB-A-01