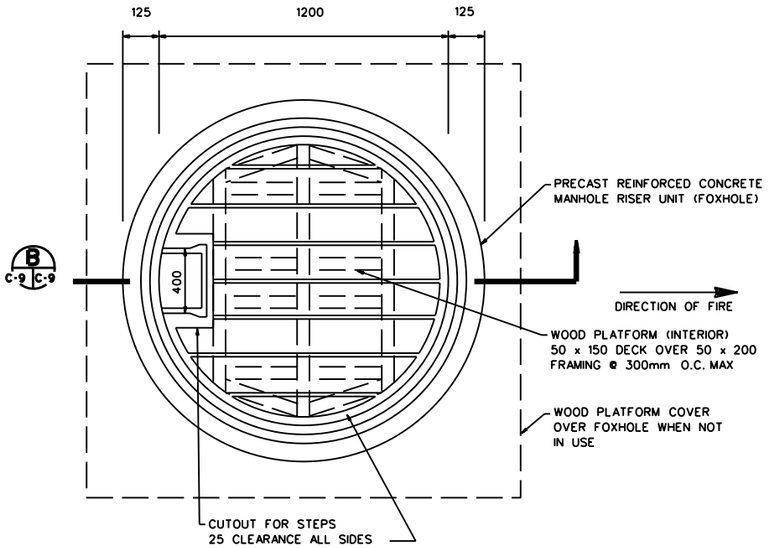

ONE MAN FIGHTING POSITION PLAN
SCALE: N.T.S.

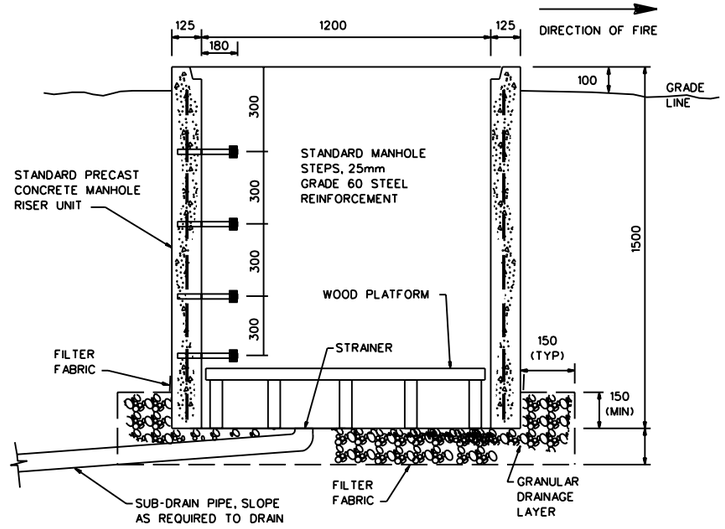

SECTION B
SCALE : N.T.S.

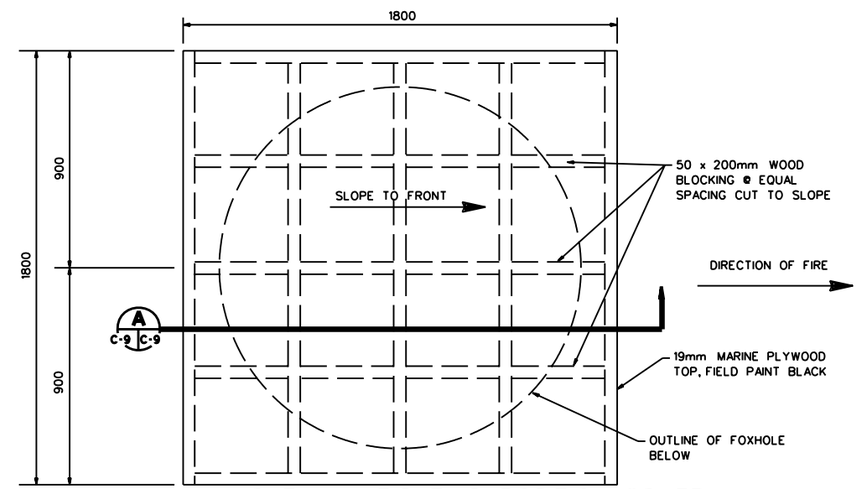

ONE MAN FIGHTING POSITION COVER
SCALE: N.T.S.

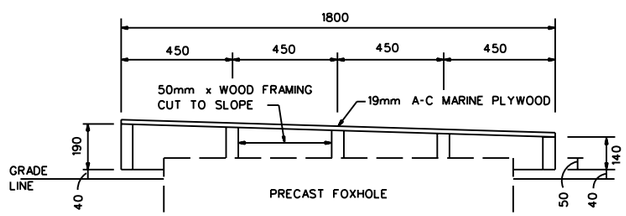

SECTION A
SCALE : N.T.S.

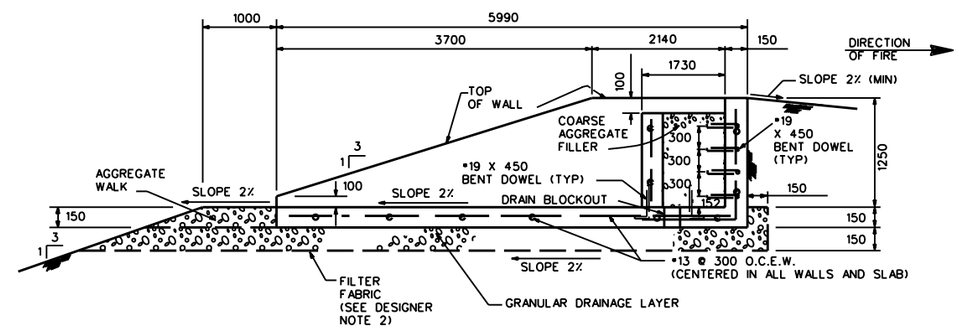

SECTION C
SCALE : N.T.S.

GENERAL NOTES:

1. CONCRETE SHALL DEVELOP A MINIMUM COMPRESSIVE STRENGTH OF 28 MPa IN 28 DAYS.
2. FIGHTING POSITIONS SHALL BE CONSTRUCTED OF REINFORCED CONCRETE: CONCRETE STRUCTURES SHALL BE PRE-CAST OR CAST-IN-PLACE.
3. ALL REINFORCING STEEL SHALL BE PER ASTM A615, GRADE 60.
4. AREAS DISTURBED BY CONSTRUCTION ACTIVITIES SHALL BE REVEGETATED OR RESURFACED CONSISTENT WITH THE NATURAL SURROUNDINGS. GROUND COVER SHALL NOT REDUCE TARGET VISIBILITY.
5. ALL WOOD FRAMING SHALL BE PRESSURE TREATED. ALL WOOD CONNECTIONS SHALL BE MADE WITH HOT-DIPPED GALVANIZED NAILS.
6. ALL DIMENSIONS ARE mm UNLESS OTHERWISE INDICATED

NOTES TO DESIGNER:

1. THE USING AGENCY MAY REQUIRE A SURFACE FOR A PRONE FIRING POSITION NEAR THE FOXHOLE. THE DESIGNER SHALL COORDINATE THE MATERIAL AND LOCATION WITH THE USING AGENCY.
2. THE NEED FOR FILTER FABRIC SHOULD BE EVALUATED AS PART OF THE SITE ADAPTION PROCESS. A FILTER LAYER MAY OR MAY NOT BE REQUIRED DEPENDING UPON THE SOIL TYPE AT A PARTICULAR SITE.

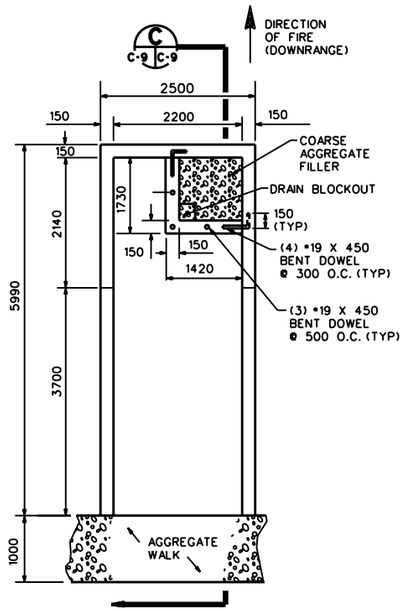

WALK-IN FIGHTING POSITION (TWO MAN) PLAN
SCALE: N.T.S.

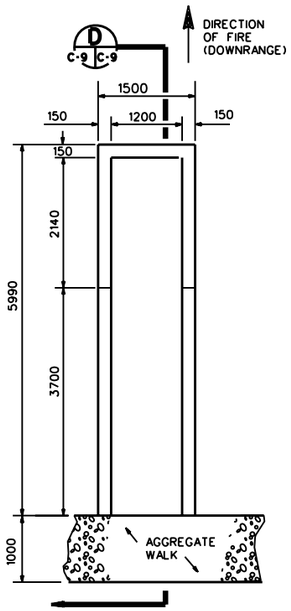

WALK-IN FIGHTING POSITION (ONE MAN) PLAN
SCALE: N.T.S.

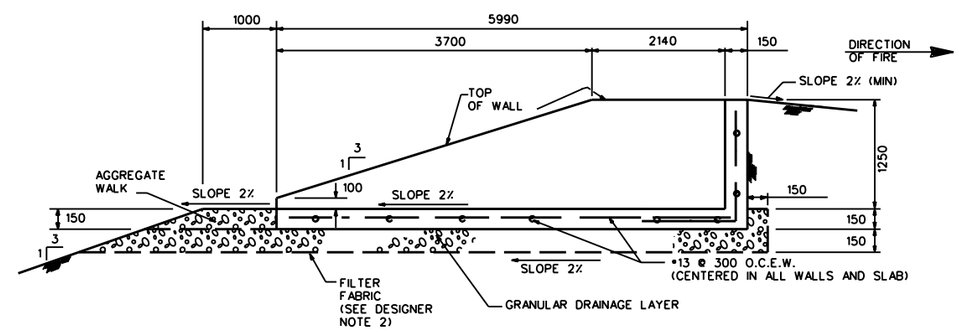

SECTION D
SCALE : N.T.S.

US Army Corps of Engineers

Rev.	Description	Date	Approved
*			

Designed by: | Dwn by: | Ckd by: | Reviewed by: | Submitted by: | Date: | Rev.

Design file no.: | Drawing code: | File name: | Plot scale: | Plot date:

U. S. ARMY ENGINEERING AND SUPPORT CENTER, HUNTSVILLE
HUNTSVILLE, ALABAMA

30 MAY 2006

RANGE AND TRAINING LAND PROGRAM
STANDARD DESIGN MANUAL

FIGHTING POSITIONS

Sheet reference number:
CD-09

Sheet of