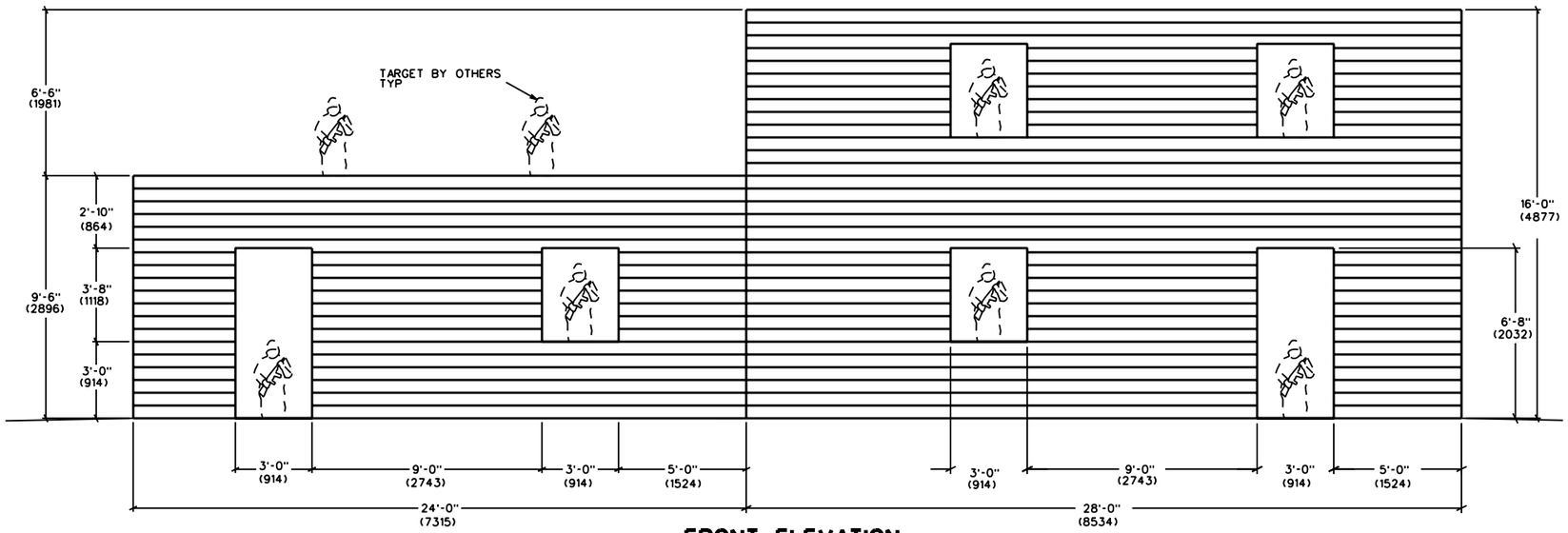

FRONT ELEVATION

SCALE : N.T.S.

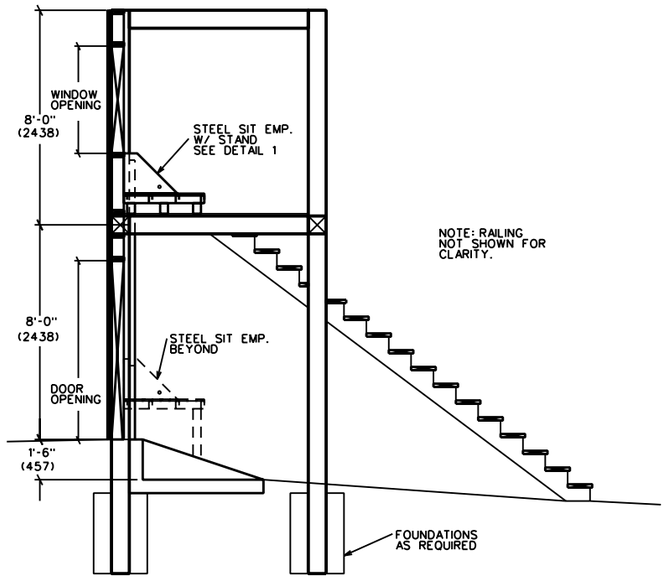

SECTION A

SCALE : N.T.S.

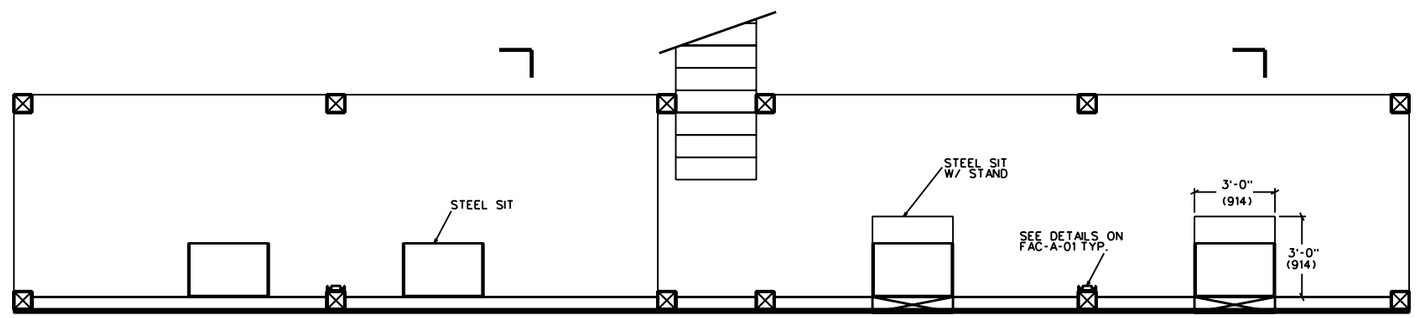

SECOND FLOOR PLAN

SCALE : N.T.S.

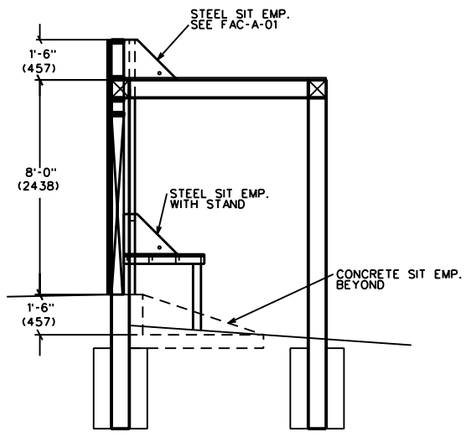

SECTION B

SCALE : N.T.S.

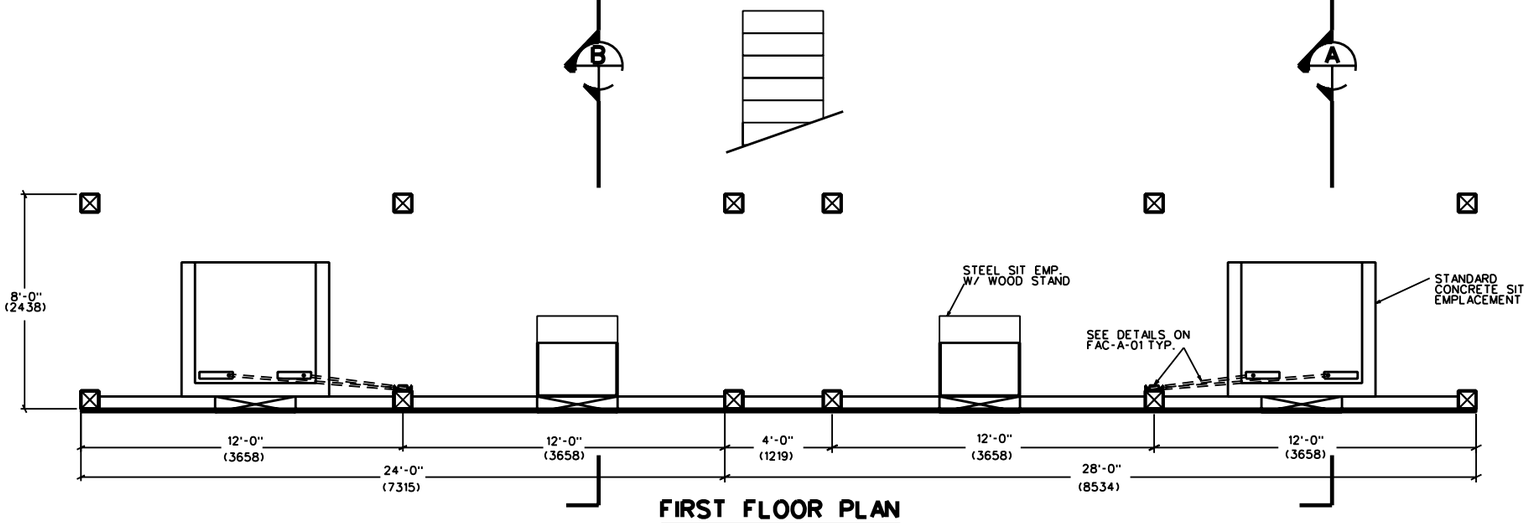

FIRST FLOOR PLAN

SCALE : N.T.S.

NOTES:

1. MINIMUM FACADE SHEATHING IS 3/4" EXTERIOR PLYWOOD SIDING
2. FACADE MUST BE DESIGNED TO LOCAL CONDITIONS (STRUCTURAL AND GEOTECH)
3. SEE FAC-A-03 FOR DOUBLE FACADE
4. SEE FAC-A-01 FOR INFORMATION NOT SHOWN

US Army Corps of Engineers

Rev.	Description	Date	Approved

Designed by: | Dwn by: | Ckd by: | Reviewed by: | Submitted by: | Date: | Rev.

Design file no.: | Drawing code: | File name: | Plot date: | Plot time:

U. S. ARMY ENGINEERING AND SUPPORT CENTER, HUNTSVILLE
HUNTSVILLE, ALABAMA

1 NOV 2006

RANGE AND TRAINING LAND PROGRAM
STANDARD DESIGN MANUAL

FACADE
SINGLE FACADE

Sheet reference number:
FAC-A-02