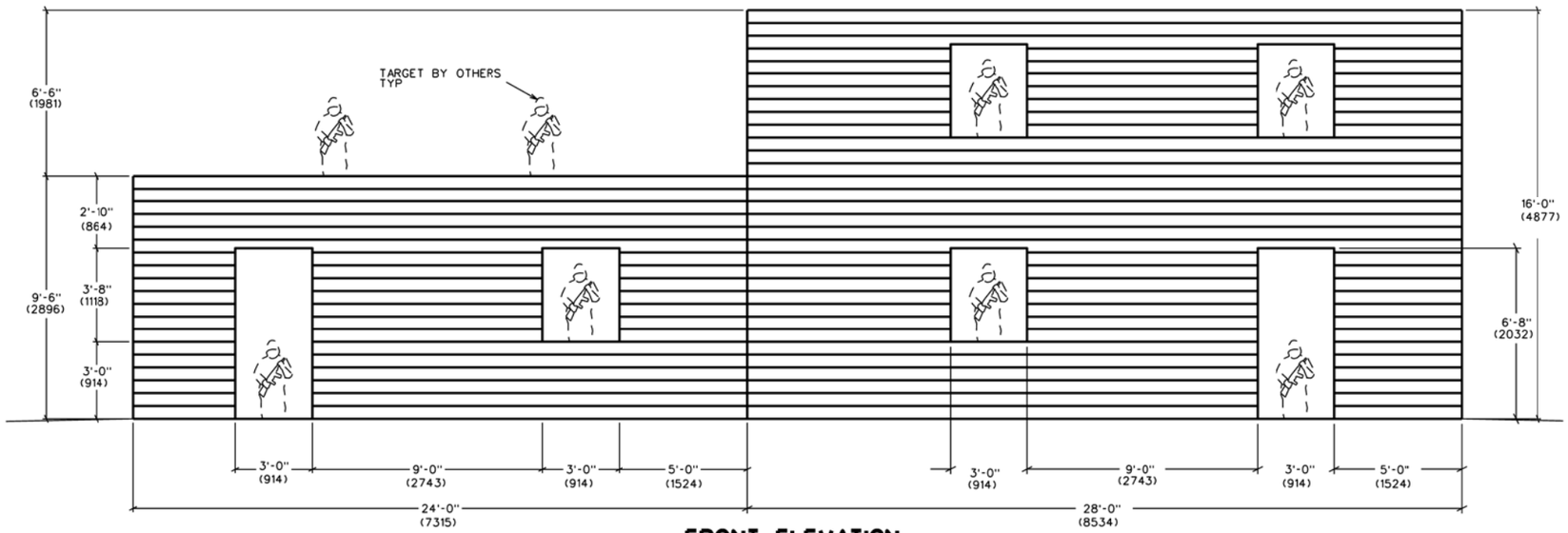

FRONT ELEVATION
SCALE : N.T.S.

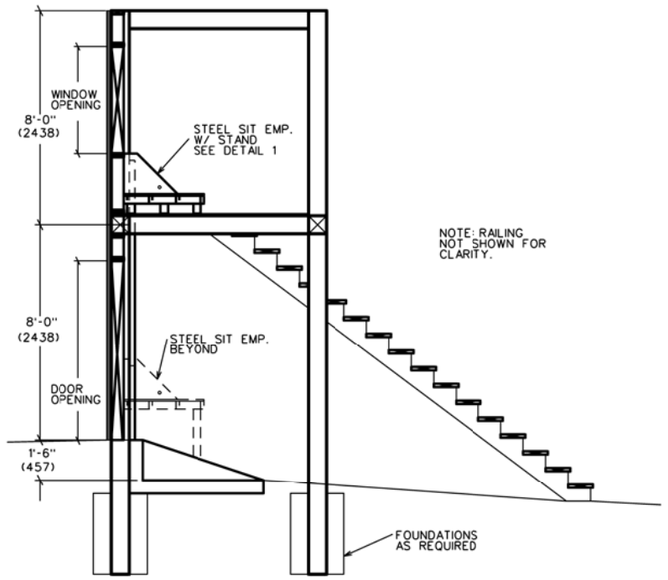

SECTION A
SCALE : N.T.S.

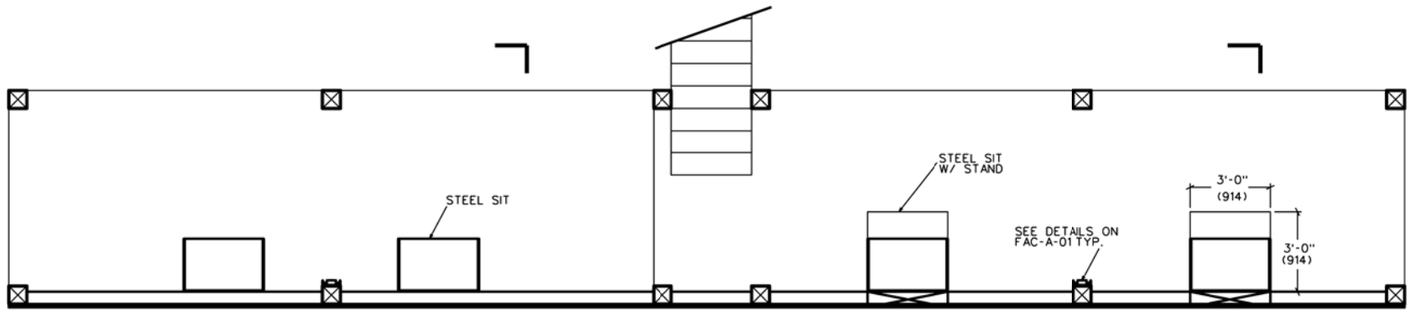

SECOND FLOOR PLAN
SCALE : N.T.S.

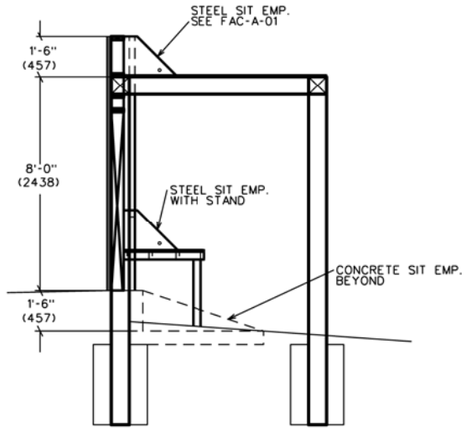

SECTION B
SCALE : N.T.S.

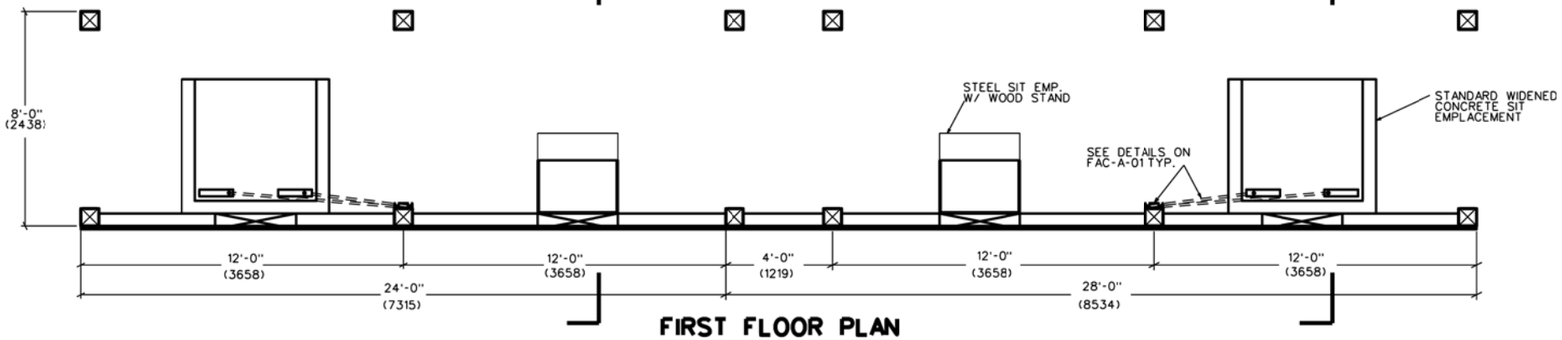

FIRST FLOOR PLAN
SCALE : N.T.S.

NOTES:

1. MINIMUM FACADE SHEATHING IS 3/4" EXTERIOR PLYWOOD SIDING
2. FACADE MUST BE DESIGNED TO LOCAL CONDITIONS (STRUCTURAL AND GEOTECH)
3. SEE FAC-A-03 FOR DOUBLE FACADE
4. SEE FAC-A-01 FOR INFORMATION NOT SHOWN

US Army Corps of Engineers

Rev #	Description	Date	Approved

Designed by: | Date: | Rev.
Dwn by: | Ckd by: | Design file no.
Reviewed by: | Drawing code:
Submitted by: | File name: Plot date: Plot scale:

U. S. ARMY ENGINEERING AND SUPPORT CENTER, HUNTSVILLE
HUNTSVILLE, ALABAMA

1 MAR 2009

RANGE AND TRAINING LAND PROGRAM
STANDARD DESIGN MANUAL

FACADE
SINGLE FACADE

Sheet reference number:
FAC-A-02