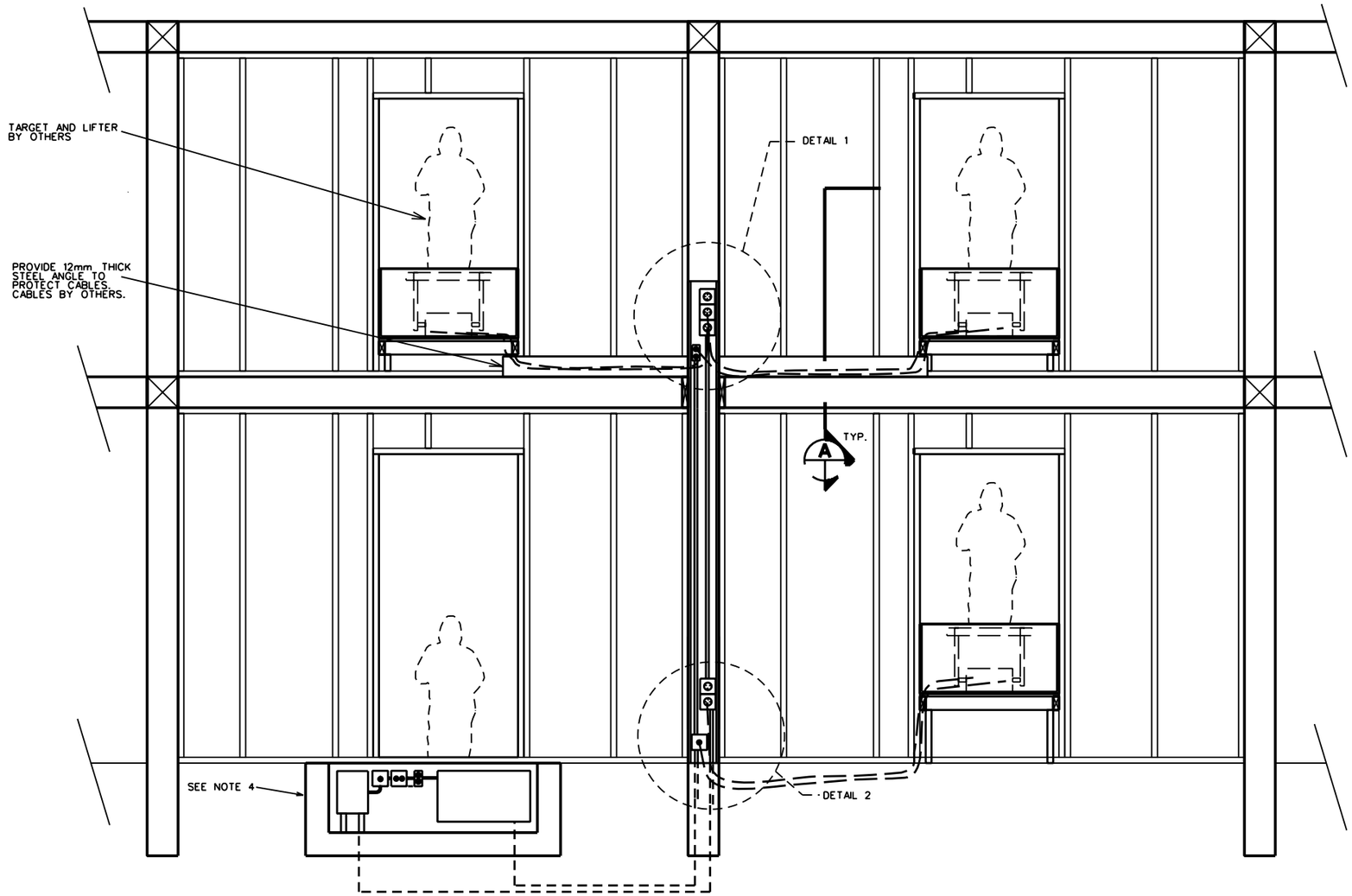

TYPICAL REAR ELEVATION

SCALE : N.T.S.

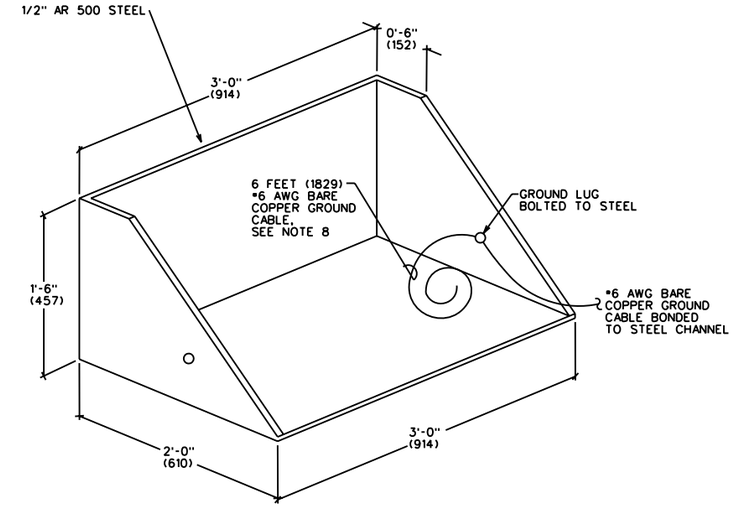

STEEL TARGET EMPLACEMENT

SCALE : N.T.S.

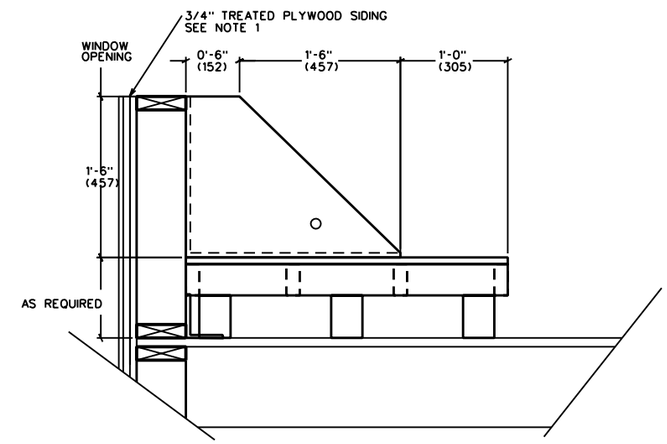

SECTION A

SCALE : N.T.S.

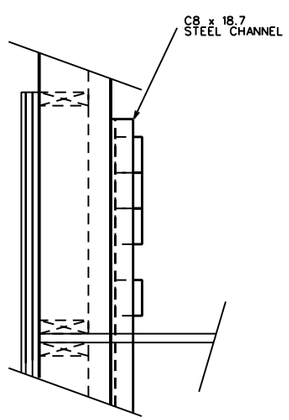

SECTION B

SCALE : N.T.S.

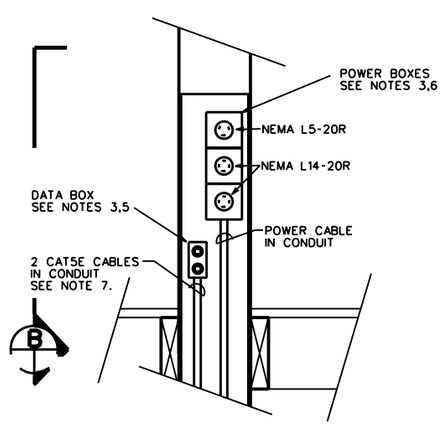

DETAIL 1

SCALE : N.T.S.

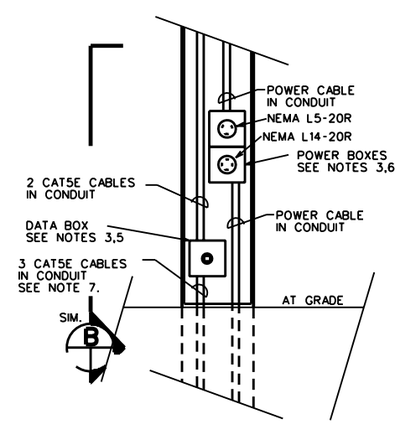

DETAIL 2

SCALE : N.T.S.

NOTES:

1. FOR UAC GRENADIER GUNNERY FACADE PROVIDE AN ADDITIONAL 6mm TO 12mm THICK, UV LIGHT AND OZONE RESISTANT, RUBBER MATTING ("LINATEX OZ" OR SIMILAR) ON THE FACE OF FRONT FACADE TO PREVENT SHATTERING OF THE WOOD FROM THE IMPACT OF THE GRENADES
2. SEE FAC-1-02 OR UAC-A-03 FOR INFORMATION NOT SHOWN
3. PROVIDE WEATHERPROOF EXTERIOR ENCLOSURES MOUNTED 305 AFG FOR FIRST FLOOR, 305 ABOVE PLATFORM ON SECOND FLOOR. PROVIDE CONDUIT SEAL WHEN CONDUIT ENTERS ENCLOSURES FROM THE TOP.
4. PROVIDE STANDARD SIT EMPLACEMENT AS SHOWN ON ED-01 BEHIND THE DOOR IN THE FACADE.
5. PROVIDE RJ45 MALE CONNECTION IN DATA BOXES. PROVIDE TWO RJ45 CONNECTIONS IN DATA BOX ON SECOND FLOOR. PROVIDE EACH MALE RJ45 CONNECTION WITH A FEMALE NEMA 4X RJ45 CONNECTOR FOR EASE OF REPLACEMENT IN FUTURE. PROVIDE A CONNECTOR CAP FOR EACH NEMA 4X RJ45 FEMALE CONNECTOR FOR WEATHERPROOF COVER WHEN NOT IN USE.
6. PROVIDE NEMA L14-20R AND NEMA L5-20R RECEPTACLE IN POWER BOXES EACH WITH WEATHERPROOF IN-USE COVERS. THE NEMA L14-20R AND NEMA L5-20R RECEPTACLES SHALL BE POWERED VIA CIRCUIT FROM THE LOADCENTER IN THE SIT EMPLACEMENT.
7. EACH CAT5E CABLE IS HOMERUNNED TO THE MASTER TARGET DATA PANEL IN THE SIT EMPLACEMENT.
8. BOND A 6 FOOT #6 AWG TO THE STEEL TARGET HOUSING LEAVING THE OTHER END COILED IN THE TARGET HOUSING FOR FUTURE CONNECTION TO TARGET MECHANISM. BOND EACH STEEL TARGET HOUSING TO THE STEEL CHANNEL USING A MINIMUM #6 AWG BARE COPPER GROUND CABLE. BOND THE STEEL CHANNEL TO THE TARGET GROUND ROD LOCATED IN THE SIT EMPLACEMENT BEHIND THE FACADE DOOR LOCATION USING A MINIMUM #6 AWG BARE COPPER GROUND CABLE.

US Army Corps of Engineers

Rev.	Description	Date	Approved

Designed by: | Date: | Rev.
Dwn by: | Ckd by: | Design file no.
Reviewed by: | Drawing code:
Submitted by: | File name: | Plot date: | Plot scale:

U. S. ARMY ENGINEERING AND SUPPORT CENTER, HUNTSVILLE
HUNTSVILLE, ALABAMA

1 NOV 2006

RANGE AND TRAINING LAND PROGRAM
STANDARD DESIGN MANUAL

FACADE
EMPLACEMENT DETAILS

Sheet reference number:
FAC-A-01