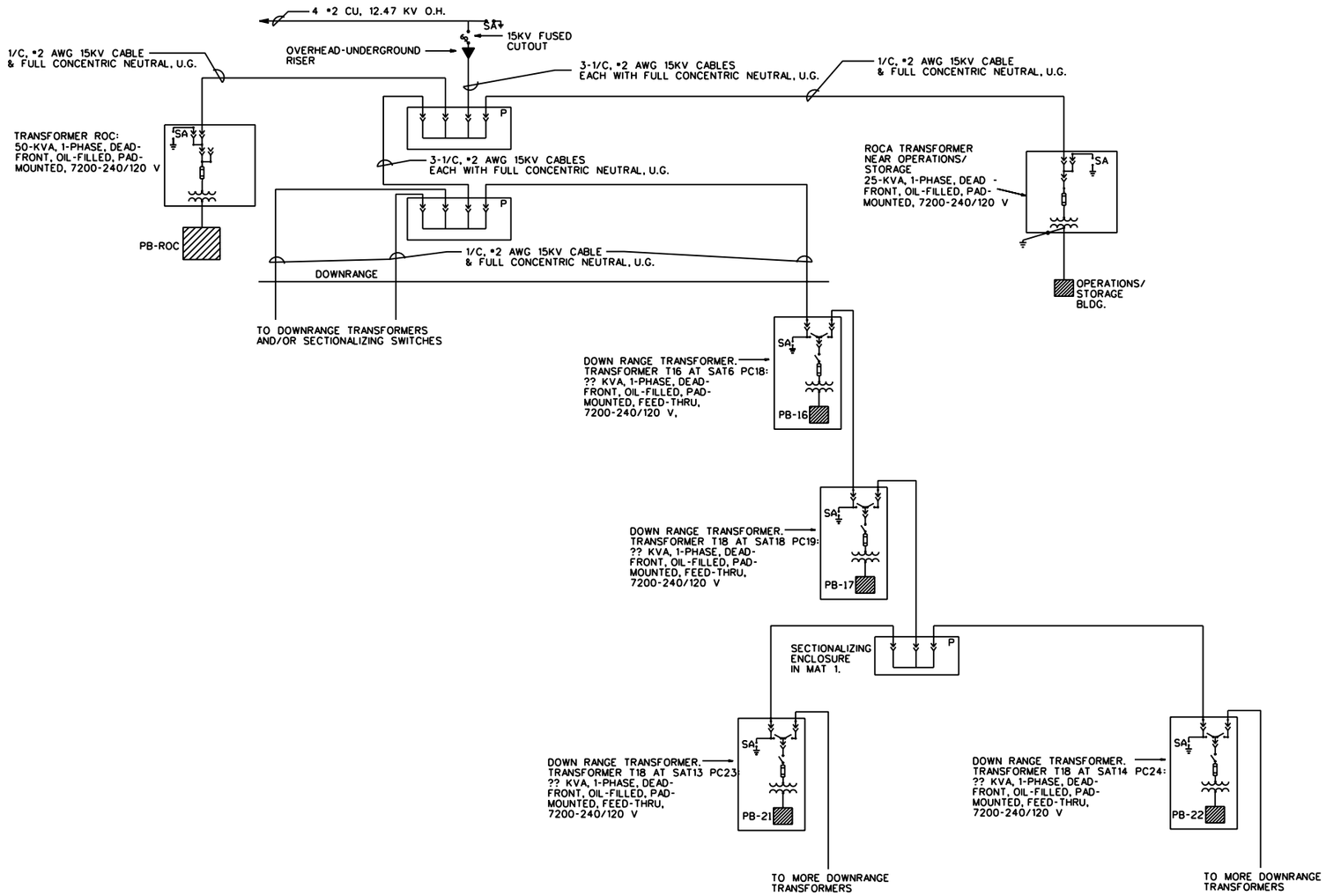

SAMPLE POWER ONELINE DIAGRAM (PARTIAL)

ELECTRICAL LEGEND - ONE LINE DIAGRAM:

- FUSE
- SA — SURGE ARRESTER-?KV, MOV, DEAD-FRONT ELBOW
- POWER TRANSFORMER
- MOLDED CASE CIRCUIT BREAKER
- GROUND CONNECTION
- LOAD BREAK CONNECTOR
- 120/240V, PANELBOARD W/ MAIN BREAKER
- FUSED CUTOUT
- SWITCH, 1 PHASE, GANG-OPERATED OIL-INSULATED
- O.H. — OVERHEAD
- U.G. — UNDERGROUND
- SWITCH, 100 AMP, NEMA 3R ENCLOSURE
- PRIMARY CABLE TERMINATION/SECTIONALIZING ENCLOSURE, THREE-PHASE, 4-WAY, PAD-MOUNTED, DEAD-FRONT, WITH 15 KV CLASS, LOAD-BREAK-ELBOW TERMINATIONS.
- PRIMARY CABLE TERMINATION/SECTIONALIZING ENCLOSURE, SINGLE-PHASE, 3-WAY, PAD-MOUNTED, DEAD-FRONT, WITH 15 KV CLASS, LOAD-BREAK-ELBOW TERMINATIONS.

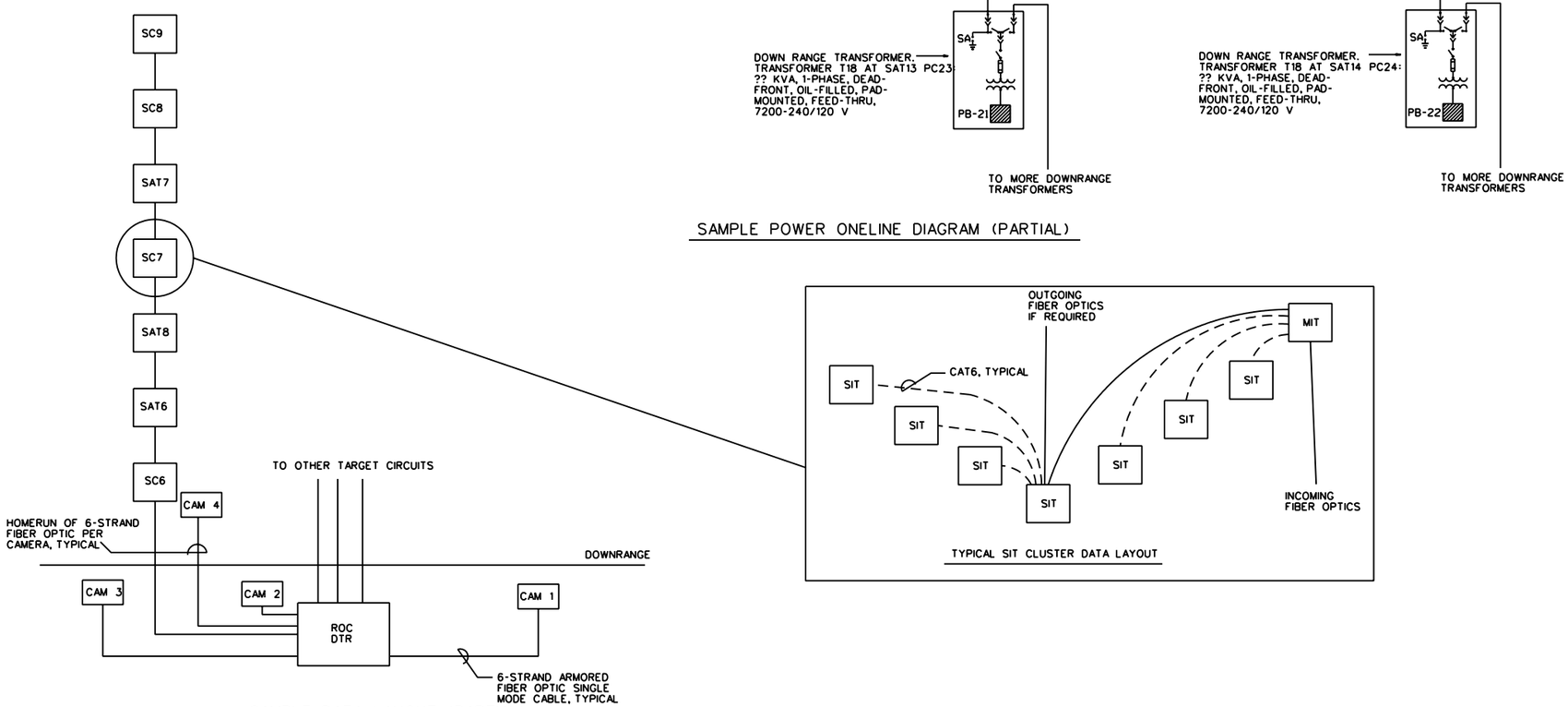

TYPICAL SIT CLUSTER DATA LAYOUT

SAMPLE DATA LAYOUT (PARTIAL)

US Army Corps of Engineers

Rev.	Description	Date	Approved
*			

Designed by: Date: Rev.
Dwn by: Ckd by: Design file no.
Reviewed by: Drawing code:
Submitted by: File name: Plot scale: Plot date:

U. S. ARMY ENGINEERING AND SUPPORT CENTER, HUNTSVILLE
HUNTSVILLE, ALABAMA

15 APR. 2005

RANGE AND TRAINING LAND PROGRAM
STANDARD DESIGN MANUAL

DIGITAL MULTIPURPOSE RANGE COMPLEX
SAMPLE ONE-LINE DIAGRAMS

Sheet reference number:
DMC-E-05

Sheet of