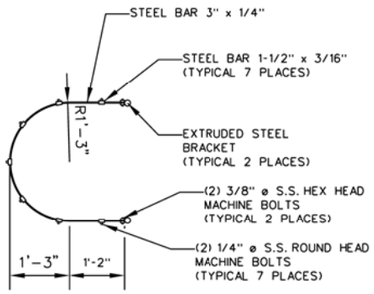

LADDER CAGE DETAIL

SCALE: 1" = 20'

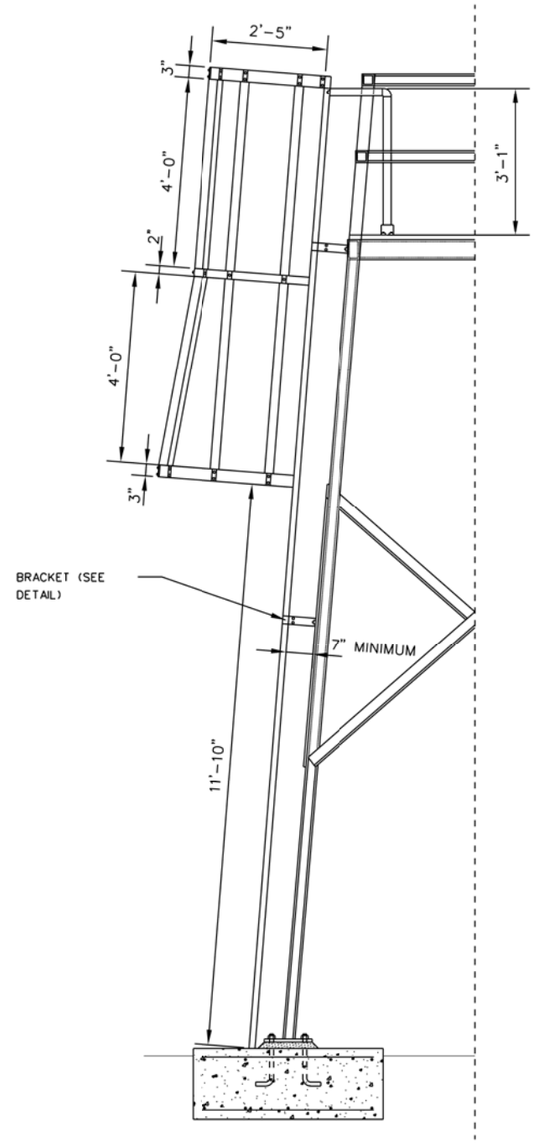

SECTION

SCALE: 1" = 20'

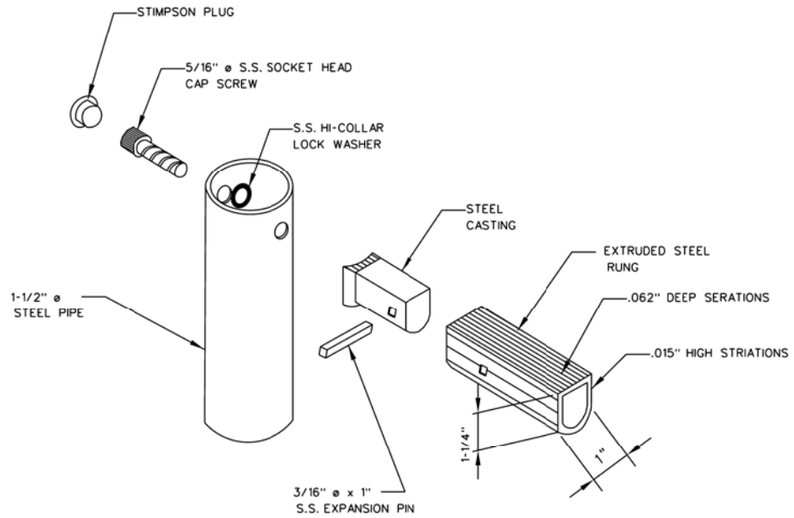

LADDER RUNG DETAIL

N.T.S.

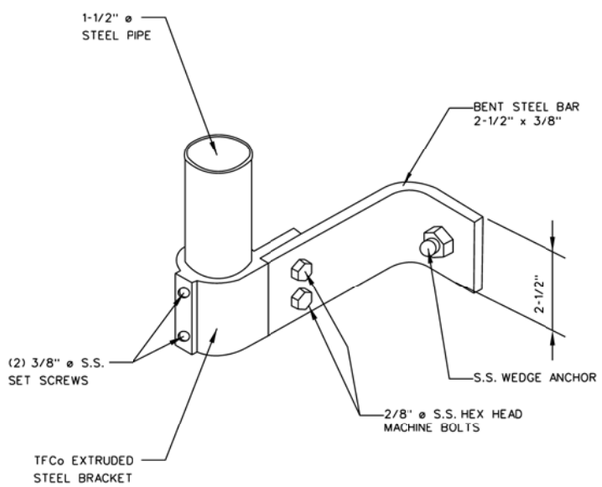

LADDER BRACKET DETAIL

N.T.S.

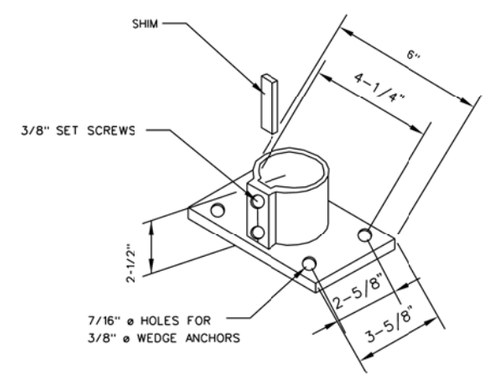

BASE FLANGE DETAIL

N.T.S.

GRAPHIC SCALE:

20 0 20 40

SCALE: 1" = 20'

NOTES TO DESIGNER:

1. SEE CD-26 FOR REMAINDER OF DETAILS FOR THIS TOWER.

FIXED HEIGHT PLATFORM TOWER

US Army Corps of Engineers

Rev.	Description	Date	Approved

Designed by: | Date: | Rev.
Dwn by: | Ckd by: | Design file no.
Reviewed by: | Drawing code:
Submitted by: | File name / Plot scale / Plot scale:

U. S. ARMY ENGINEERING AND SUPPORT CENTER, HUNTSVILLE
HUNTSVILLE, ALABAMA

JUNE 2011

RANGE AND TRAINING LAND PROGRAM
STANDARD DESIGN MANUAL

TYPICAL CAMERA TOWERS

Sheet reference number:
CD-28