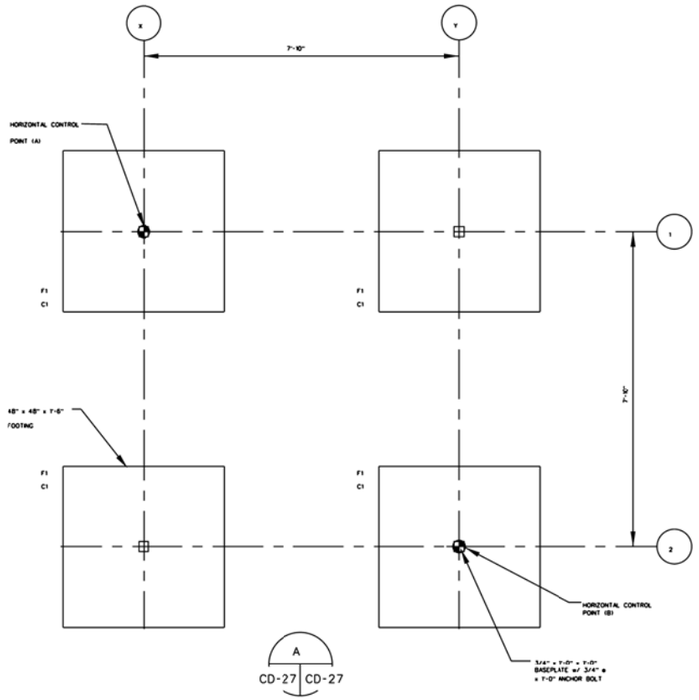

FOUNDATION PLAN

SCALE: 1" = 2'

1. TOP OF FOOTINGS 2" ABOVE FINISHED GRADE.
2. F1-FOOTING TYPICAL 48" x 48" x 7'-6" w/ 5-#6's E.W. T & B
3. C1-COLUMN TYPICAL TS HSS 4" x 4" x 1/2" w/ BASEPLATE 3/4" x 7'-0" x 7'-0" w/ (4) 3/4"ø x 7'-0" LONG (9"+ 3" PROJECTION) ANCHOR BOLTS.
4. ALL EXPOSED STEEL TO BE GALVANIZED.

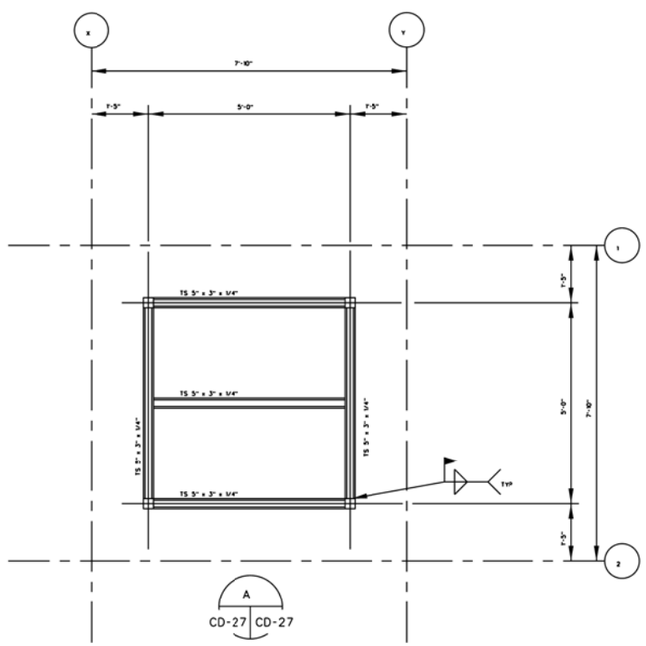

PLATFORM PLAN

SCALE: 1" = 2'

1. TOP OF STEEL, 17'-0" ABOVE TOP OF FOOTING.

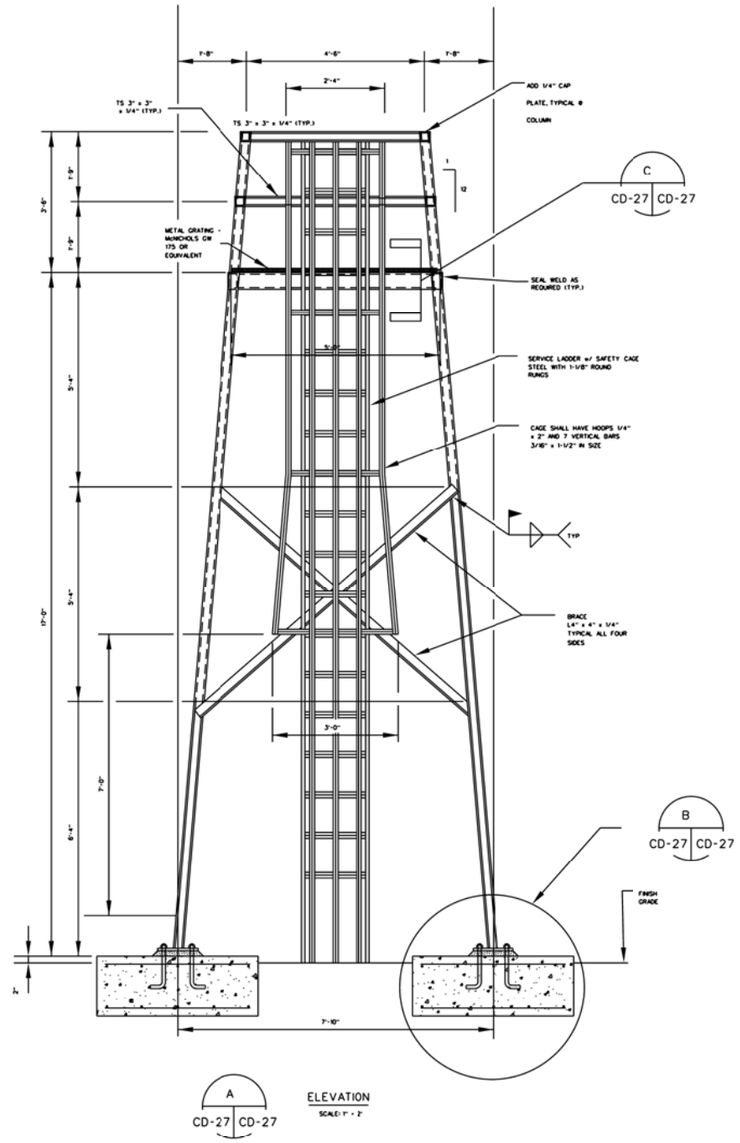

ELEVATION

SCALE: 1" = 2'

GRAPHIC SCALES:

1 0 1 2

SCALE: 1" = 1'

2 0 2 4

SCALE: 1" = 2'

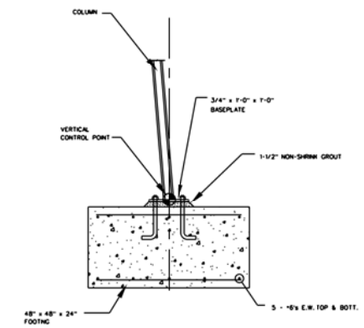

SECTION

SCALE: 1" = 2'

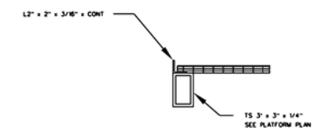

SECTION

SCALE: 1" = 1'

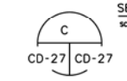

NOTES TO DESIGNER:

1. TOWER HEIGHTS SHOWN ON THIS SHEET IS FOR ILLUSTRATIVE PURPOSES ONLY. SITE CONDITIONS AND LINE OF SIGHT WILL DICTATE TOWER HEIGHT. MEMBER SIZING, CONNECTION DETAILS, ETC. SHALL ALL BE DESIGNED TO ACCOMMODATE THE SELECTED TOWER HEIGHT.
2. TOWER DESIGN SHALL CONFORM TO STANDARD EIA/TIA-22-F FOR 125 MPH BASIC WIND SPEED WITH NO ICE. THE MAXIMUM ACCEPTABLE SWAY FOR INSTRUMENTED RANGES IS 13mm IN A 50 kph WIND WITH A 600mm CUBE WEIGHING 32 kg CENTERED ON TOP (ONE HALF INCH IN A 30mph WIND WITH A 2 FOOT CUBE WEIGHING 70lbs)
3. THE TOWER SHALL BE GROUNDED IN ACCORDANCE WITH EIA STANDARDS.
4. THE FOUNDATION SHOWN IS TYPICAL. THE CONTRACTOR SHALL PROVIDE A DESIGN SUBMITTAL PACKAGE TO THE CONTRACTING OFFICER THAT IS STAMPED BY AN ENGINEER REGISTERED IN THE STATE. DESIGNER SHALL VERIFY SOIL CONDITIONS AND STRENGTHS PRIOR TO THE DESIGN OF THE FOUNDATION. THE FOUNDATION DESIGN PACKAGE SHALL INCLUDE ALL RELATIVE INFORMATION THE ENGINEER USED TO DETERMINE HIS DESIGN, INCLUDING (BUT NOT LIMITED TO) SOIL PRESSURE, CONCRETE STRENGTH, REBAR SIZING AND MATERIAL, EXCAVATION AND BACKFILL REQUIREMENTS, SOIL TYPE, SOIL COHESION, SOIL UNIT WEIGHT, INTERNAL ANGLE OF FRICTION, GROUND WATER ASSUMPTIONS, AND FROST ACTION CONSIDERATIONS.
5. THE TOWER SHALL NOT BE GUYED AND MUST BE FULLY SELF-SUPPORTING UNDER ALL OUTLINED DESIGN CRITERIA.
6. DESIGNER SHALL VERIFY THE NEED FOR AN AVIATION OBSTRUCTION LIGHT IN DESIGN OF TOWER AND PROVIDE IT IF NEEDED.
7. THE CONTRACTOR SHALL PROVIDE A 2 FOOT SQUARE, ONE HALF INCH THICK, CAMERA MOUNTING PLATE ON TOP OF THE TOWER DESIGNED TO SUPPORT 70 LBS.
8. SEE SHEET CD-27 FOR REMAINDER OF DETAILS FOR THIS TOWER.

FIXED HEIGHT PLATFORM TOWER

US Army Corps of Engineers

Rev.	Description	Date	Approved

Designed by: | Date: | Rev.
Dwn by: | Ckd by: | Design file no.
Reviewed by: | Drawing code:
Submitted by: | File name: Pkg. name: Pkg. scale:

U. S. ARMY ENGINEERING AND SUPPORT CENTER, HUNTSVILLE
HUNTSVILLE, ALABAMA

JULY 2011

RANGE AND TRAINING LAND PROGRAM
STANDARD DESIGN MANUAL

TYPICAL CAMERA TOWERS

Sheet reference number:
CD-27