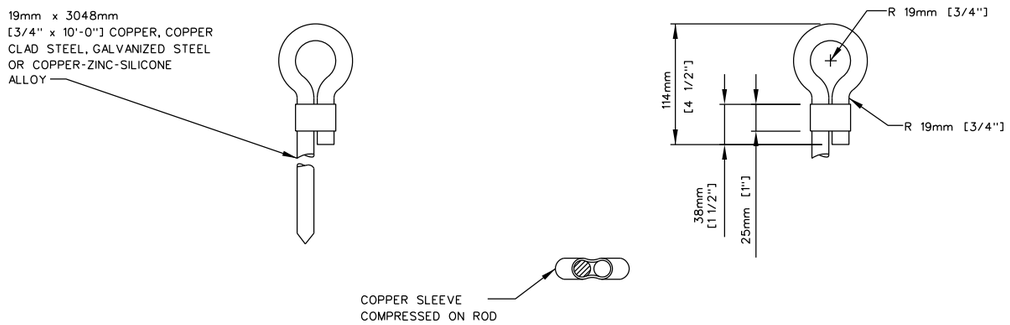

3 CD-24 | CD-24

EYE AND SLEEVE ASSEMBLY DETAIL

N.T.S.

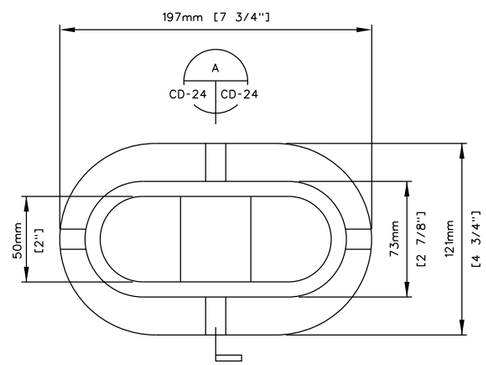

PLAN

NOTE:
MOORING DEVICE TO BE CAST IN DUCTILE IRON 80-55-06 OR EQUAL.

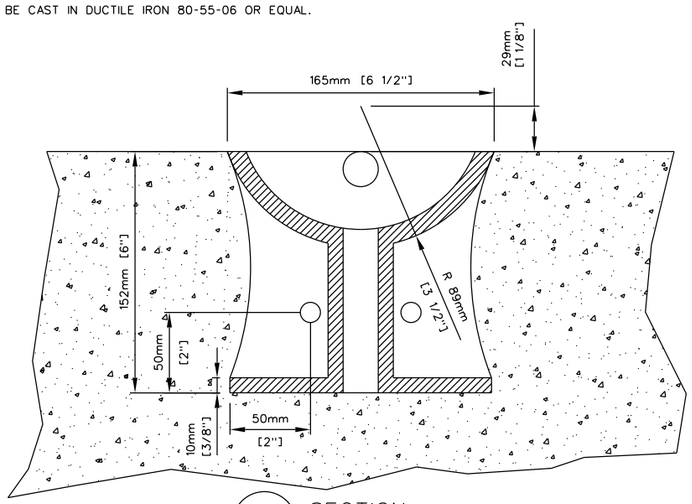

A CD-24 | CD-24 SECTION

2 CD-24 | CD-24

MOORING DEVICE DETAILS

N.T.S.

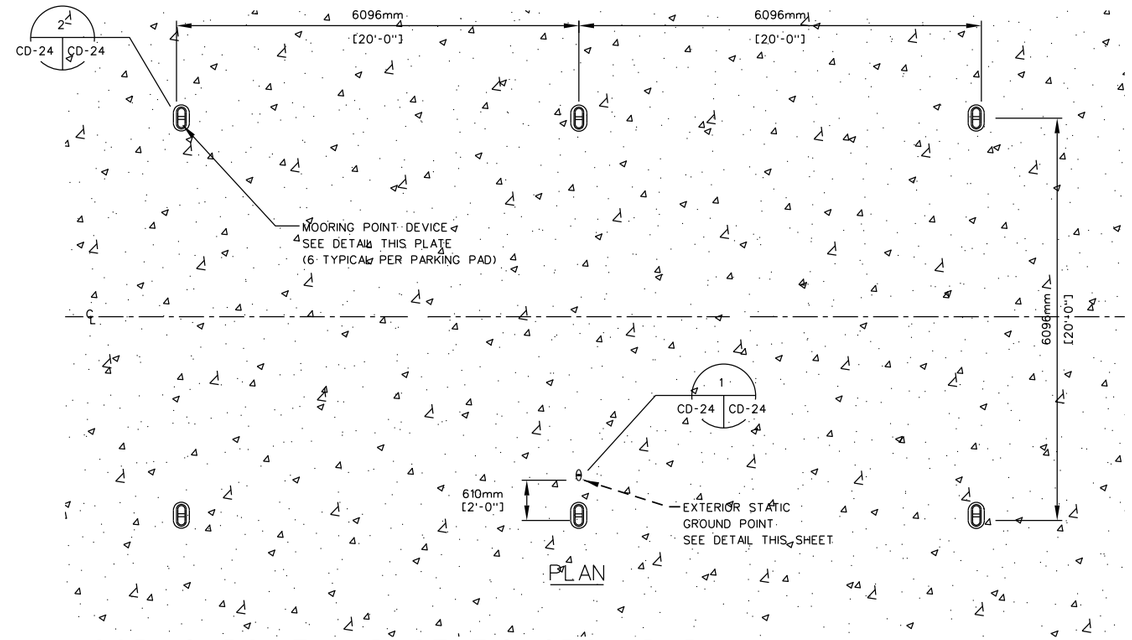

MOORING POINT AND STATIC GROUND PLAN

SCALE: N.T.S.

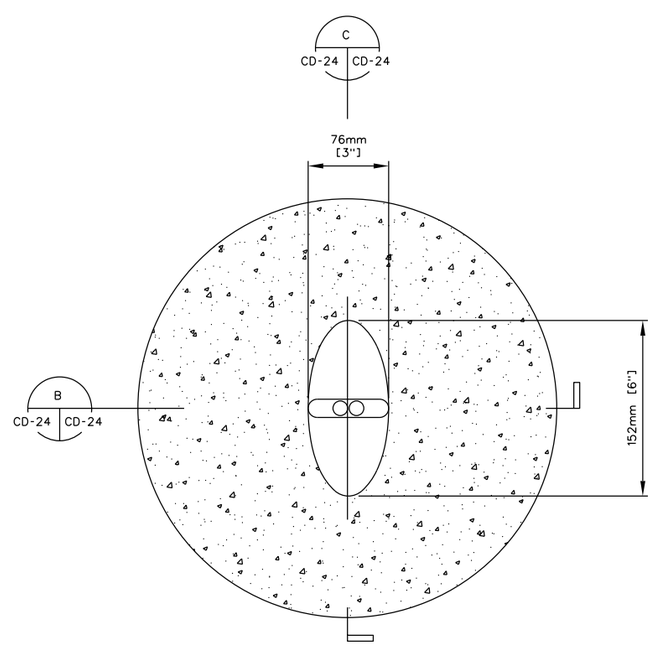

PLAN

1 CD-23 | CD-24 CD-24

STATIC GROUNDING POINT DETAILS

N.T.S.

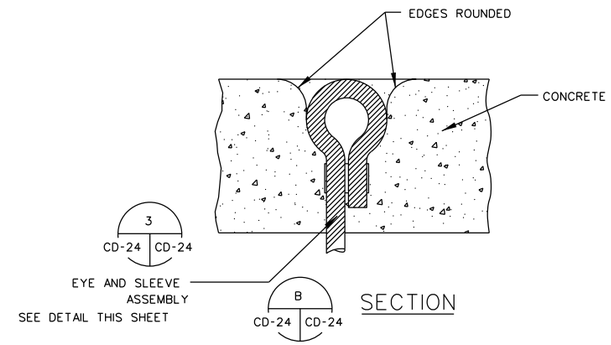

SECTION

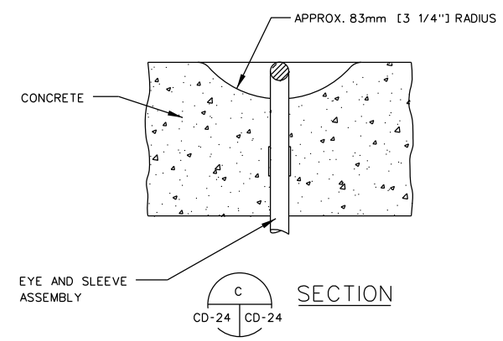

SECTION

US Army Corps of Engineers

Rev.	Description	Date	Approved
*			

Designed by: | Date: | Rev.
Dwn by: | Ckd by: | Design file no.
Reviewed by: | Drawing code:
Submitted by: | File name: Plot scale: Plot date:

U.S. ARMY ENGINEERING AND SUPPORT CENTER, HUNTSVILLE
HUNTSVILLE, ALABAMA

JULY 2011

RANGE AND TRAINING LAND PROGRAM
STANDARD DESIGN MANUAL

FARP - DETAILS

Sheet reference number:
CD-24