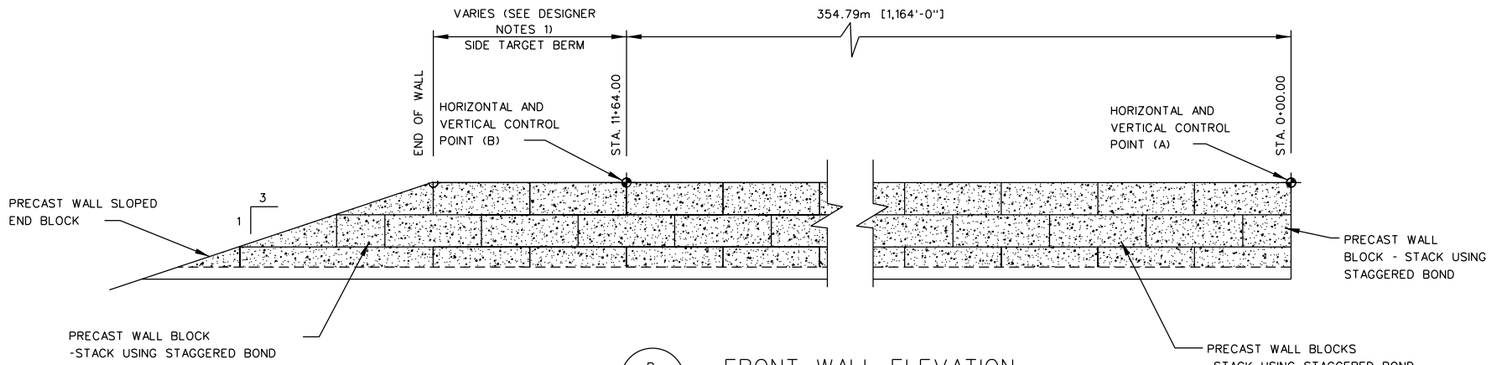

B
CD-10 | CD-09

FRONT WALL ELEVATION

SCALE: 1" = 5'

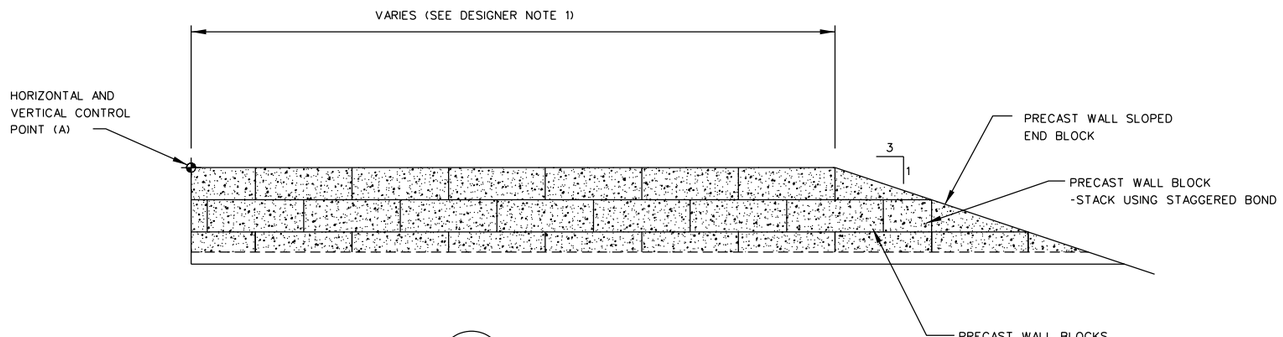

C
CD-10 | CD-09

END WALL ELEVATION

SCALE: 1" = 5'

NOTES:

1. CONTRACTOR SHALL FORM BLOCKS ON END SLOPES TO ACCOMMMODATE 3:1 SLOPES.

GENERAL NOTES:

1. CONCRETE SHALL DEVELOP A MINIMUM COMPRESSIVE STRENGTH OF 28 MPa 4000PSI) IN 28 DAYS.
2. ALL REINFORCING STEEL SHALL BE PER ASTM A615, GRADE 60.
3. FILTER FABRIC SHALL BE INSTALLED BEHIND THE WALLS. FABRIC SHALL EXTEND THE FULL HEIGHT OF THE WALL.
4. AREAS DISTURBED BY CONSTRUCTION ACTIVITIES SHALL BE REVEGETATED OR RESURFACED CONSISTENT WITH THE NATURAL SURROUNDINGS. GROUND COVER SHALL NOT REDUCE TARGET VISIBILITY.
5. SLOPE END WALLS AT A 3:1 SLOPE TO A POINT 305mm [12"] ABOVE THE EXISTING GRADE.
6. ALL DIMENSIONS ARE INDICATED AS FOLLOWS: METRIC [ENGLISH] UNITS FOR INSTANCE, 1372MM [4'-6"]
7. HORIZONTAL CONTROL POINT (A) IS LOCATED AT STA. 1+03.00. STA. 1+03.00 IS ALWAYS LOCATED ON THE TRANSFORMER END OF THE MAT.
8. TRANSFORMER TO BE LOCATED AT THE END OF MAT CLOSEST TO ENGAGEMENT POINT.

NOTES TO DESIGNER:

1. REFER TO THE BERM THICKNESS FIGURES LOCATED IN THE DESIGN MANUAL TO DETERMINE REQUIRED BERM THICKNESS.
2. THE HEIGHT OF THE MAT BERM IS MEASURED FROM THE TOP OF FINISHED GRADE. THIS DIMENSION MUST BE MAINTAINED.
3. ALL RETAINING WALLS MUST BE DESIGNED USING SITE SPECIFIC GEOTECHNICAL DESIGN PARAMETERS OBTAINED FROM A SUBSURFACE INVESTIGATION. RETAINING WALLS MAY BE CONSTRUCTED OF TREATED TIMBERS, RAILROAD TIES, CAST-IN-PLACE CONCRETE OR PRECAST CONCRETE. THE WALL SHALL BE DESIGNED SUCH THAT THE TOP 305mm [12"] (MIN) OF THE WALL CAN BE REMOVED AND REPLACED IN SECTIONS.
4. MOVING ARMOR TARGET EMPLACEMENT MAY BE CONSTRUCTED IN A MIRROR IMAGE CONFIGURATION TO THAT SHOWN.
5. BERM SLOPES SHOWN AS 3:1. SLOPES MAY VARY AS REQUIRED BY SITE SPECIFIC GEOTECHNICAL REPORT.
6. MAXIMUM ANGLE OF FIRE IS 10° FOR TANK GUNNERY AND 15° FOR AERIAL GUNNERY. ENSURE THAT RETAINING WALL IS PROTECTED BY BERM.
7. DESIGNER SHALL ACCOUNT FOR OVERTURNING MOMENT IN THE DESIGN OF THE RETAINING WALL AND ADD STABILIZATION TO THE WALL AS REQUIRED.
8. BERM THICKNESS, ONCE CALCULATED BY THE BERM THICKNESS TABLES, WILL DICTATE THE OVERALL LENGTH OF THE WALL.
9. THICKNESS OF BASE AND SUBGRADE COMPACTION UNDER WALL IS DEPENDENT ON WEIGHT OF WALL SECTION BEING USED AND SOILS CONDITIONS. ENSURE ADEQUATE FOUNDATION IS PROVIDED FOR WALL SYSTEM UTILIZED IN DESIGN.
10. DESIGNER SHALL DETERMINE WHETHER A DRAINAGE LAYER IS REQUIRED BEHIND THE RETAINING WALL AND SHALL INCLUDE IN DESIGN DOCUMENTS.
11. MAT'S SHOULD BE DESIGNED TO MAINTAIN A 0% TO 3% GRADE ALONG THE LENGTH OF THE TRACK WITH A MAXIMUM OF 5%.

GRAPHIC SCALE:

5 0 5 10

SCALE: 1" = 5'

US Army Corps of Engineers

Rev.	Description	Date	Approved

Designed by: | Date: | Rev.
Dwn by: | Ckd by: | Design file no.
Reviewed by: | Drawing code:
Submitted by: | File name: Plot scale: Plot date:

U. S. ARMY ENGINEERING AND SUPPORT CENTER, HUNTSVILLE
HUNTSVILLE, ALABAMA

OCTOBER 2010

RANGE AND TRAINING LAND PROGRAM
STANDARD DESIGN MANUAL

MOVING ARMOR TARGET
WALL ELEVATIONS

Sheet reference number:
CD-10