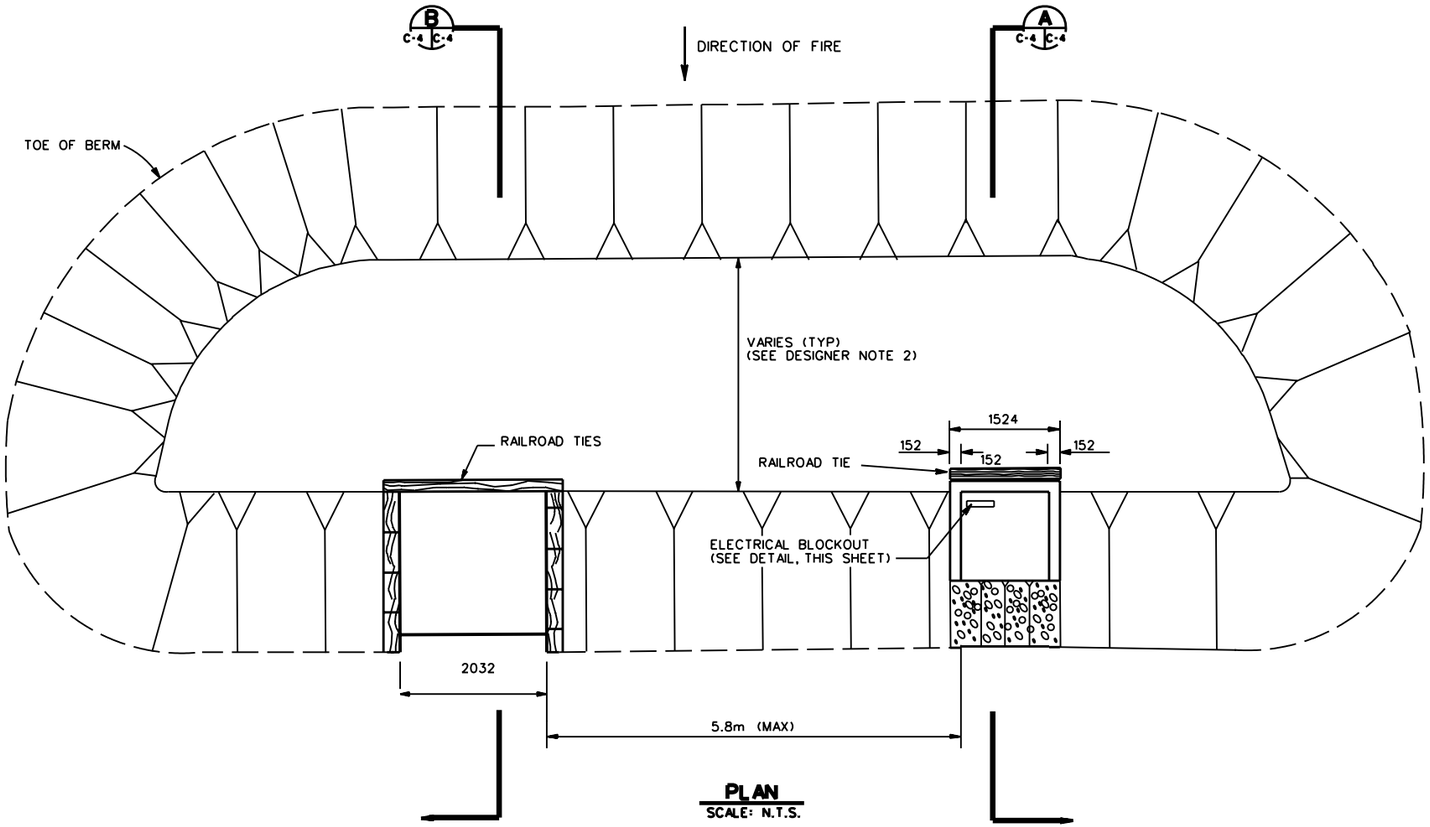

PLAN
SCALE: N.T.S.

GENERAL NOTES:

1. CONCRETE SHALL DEVELOP A MINIMUM COMPRESSIVE STRENGTH OF 28 MPa IN 28 DAYS.
2. SMALLER EMPLACEMENT (SECTION A) SHALL BE CONSTRUCTED OF REINFORCED CONCRETE; CONCRETE STRUCTURE SHALL BE PRECAST OR CAST-IN-PLACE.
3. ALL REINFORCING STEEL SHALL BE PER ASTM A615, GRADE 60.
4. AREAS DISTURBED BY CONSTRUCTION ACTIVITIES SHALL BE REVEGETATED OR RESURFACED CONSISTENT WITH THE NATURAL SURROUNDINGS. GROUND COVER SHALL NOT REDUCE EMPLACEMENT VISIBILITY.
5. PLACE RAILROAD TIES AGAINST CONCRETE WALL ON L102 x 102 x 12.7mm x 100mm STEEL ANGLES SPACED A MAXIMUM OF 900mm ON CENTER. ATTACH ANGLE TO CONCRETE WALL WITH CONCRETE ANCHORS.
6. ALL DIMENSIONS ARE mm UNLESS OTHERWISE INDICATED

NOTES TO DESIGNER:

1. RETAINING WALLS SHALL BE CONSTRUCTED OF ADEQUATELY CONNECTED TIMBERS OR RAILROAD TIES (MAY BE PREFABRICATED). FILTER FABRIC SHALL BE INSTALLED BEHIND ALL WOOD RETAINING WALLS. FABRIC SHALL EXTEND THE FULL HEIGHT OF THE WALL.
2. REFER TO THE BERM THICKNESS FIGURES LOCATED IN THE DESIGN MANUAL TO DETERMINE THE REQUIRED BERM THICKNESS.

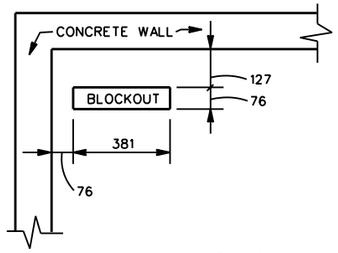

DETAIL 1
ELECTRICAL BLOCKOUT DETAIL
SCALE: N.T.S.

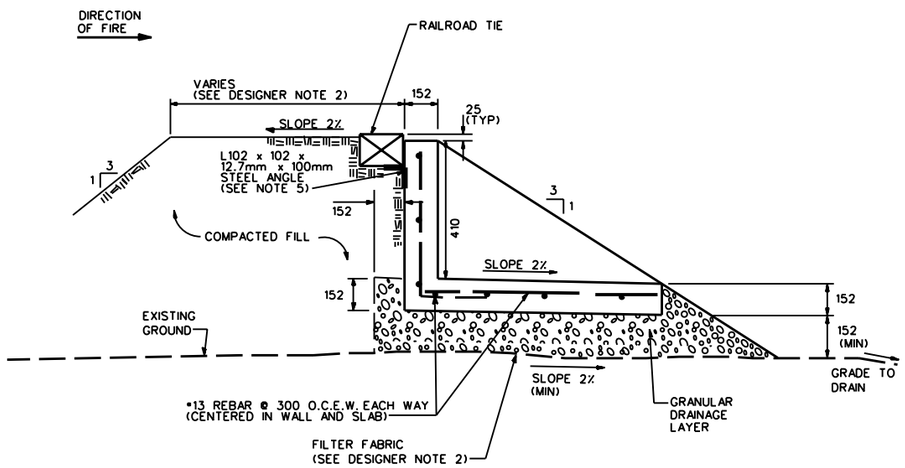

SECTION A
SCALE : N.T.S.

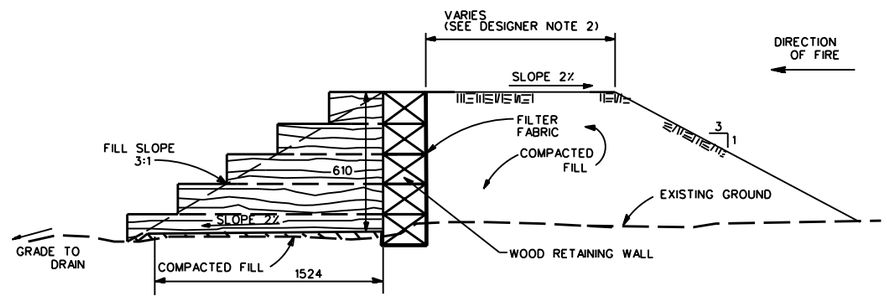

SECTION B
SCALE : N.T.S.

US Army Corps of Engineers

Rev.	Description	Date	Approved

Designed by: Date: Rev.
Dwn by: Ckd by: Design file no.
Reviewed by: Drawing code:
Submitted by: File name: Plot scale: Plot date:

U. S. ARMY ENGINEERING AND SUPPORT CENTER, HUNTSVILLE
HUNTSVILLE, ALABAMA

30 MAY 2006

RANGE AND TRAINING LAND PROGRAM
STANDARD DESIGN MANUAL

MORTAR SIMULATION DEVICE EMPLACEMENT

Sheet reference number:
CD-04

Sheet of