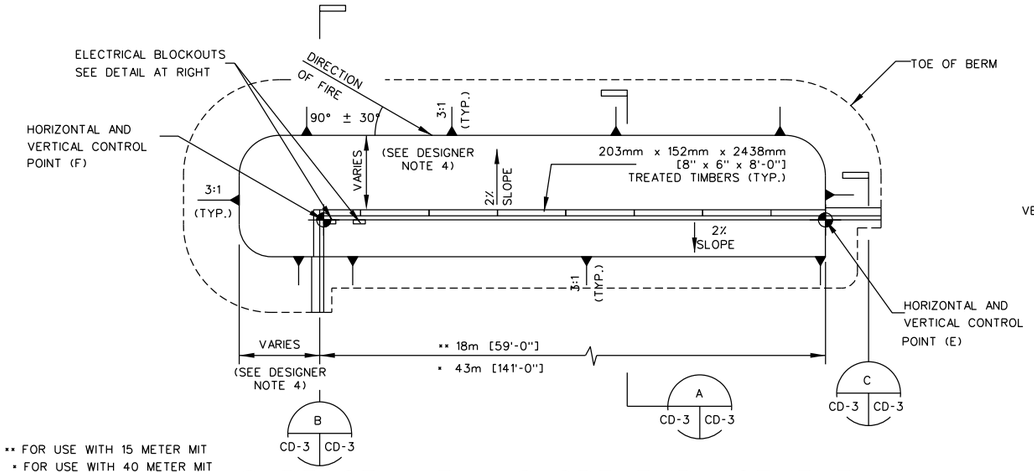

** FOR USE WITH 15 METER MIT
* FOR USE WITH 40 METER MIT

SURFACE / FILL SLOPE EMPLACEMENT

SCALE: 1" = 10'

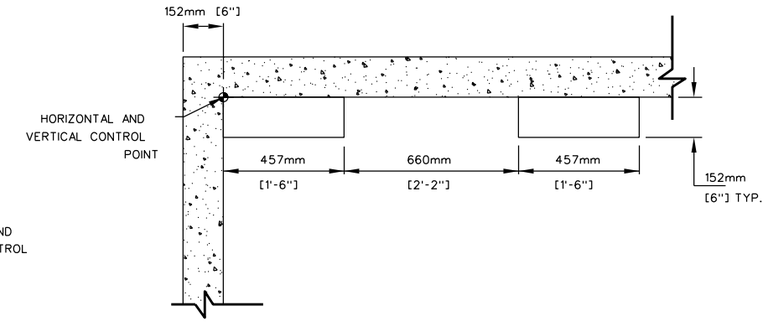

ELECTRICAL BLOCKOUT DETAIL

SCALE: 1" = 1'

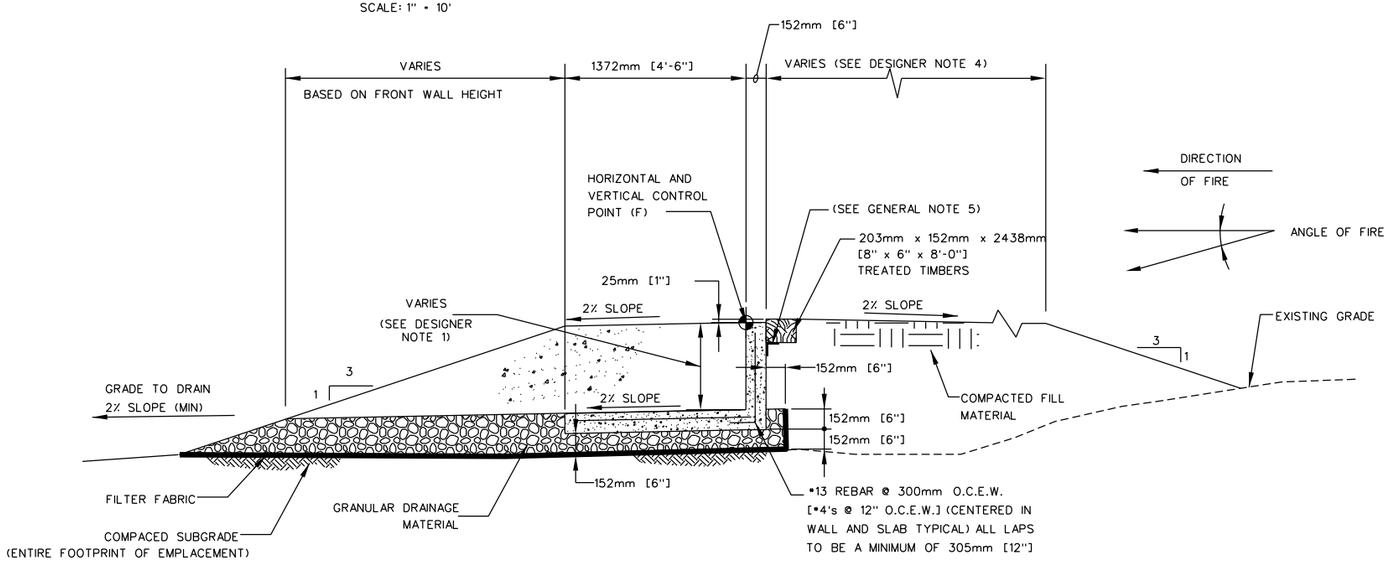

SECTION

SCALE: 1" = 2'

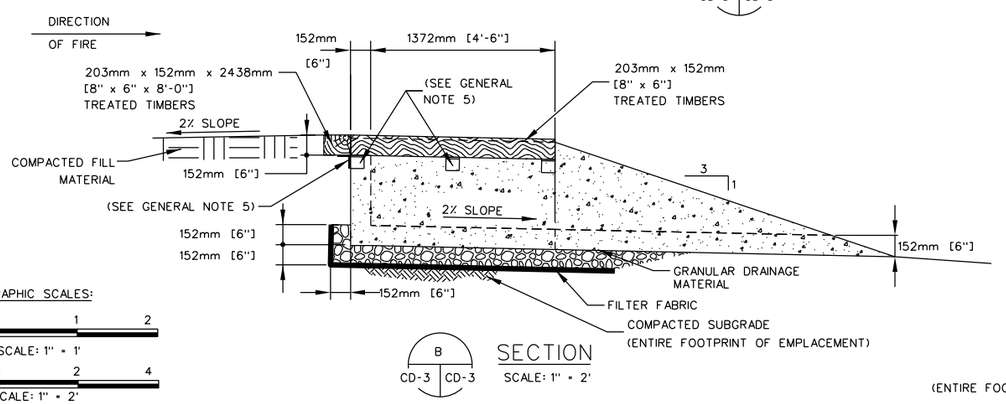

SECTION

SCALE: 1" = 2'

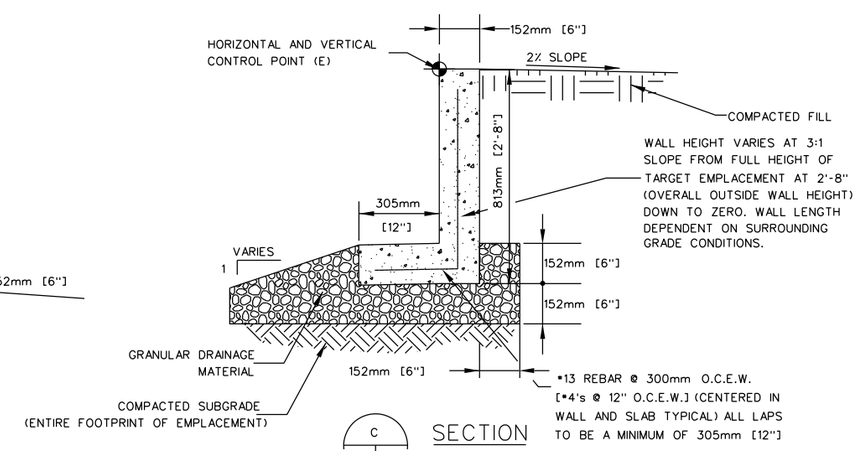

SECTION

SCALE: 1" = 1'

GRAPHIC SCALES:

1 0 1 2
SCALE: 1" = 1'

2 1 0 2 4
SCALE: 1" = 2'

10 0 10 20
SCALE: 1" = 10'

TYPICAL MOVING INFANTRY TARGET SYSTEM

GENERAL NOTES:

1. CONCRETE SHALL DEVELOP A MINIMUM COMPRESSIVE STRENGTH OF 28 MPa (4000PSI) IN 28 DAYS.
2. EMPLACEMENTS SHALL BE CONSTRUCTED OF REINFORCED CONCRETE: CONCRETE STRUCTURES SHALL BE PRECAST OR CAST-IN-PLACE.
3. ALL REINFORCING STEEL SHALL BE PER ASTM A615, GRADE 60.
4. AREAS DISTURBED BY CONSTRUCTION ACTIVITIES SHALL BE REVEGETATED OR RESURFACED CONSISTENT WITH THE NATURAL SURROUNDINGS. GROUND COVER SHALL NOT REDUCE TARGET VISIBILITY.
5. PLACE RAILROAD TIES AGAINST CONCRETE WALL ON L102mm x 102MM x 12.7mm x 102mm [4"x4"x 1/2"x 4"] STEEL ANGLES SPACED A MAXIMUM OF 914mm [3'] ON CENTER. ATTACH ANGLE TO CONCRETE WITH CONCRETE ANCHORS.
6. ALL DIMENSIONS ARE METRIC (ENGLISH) UNLESS OTHERWISE INDICATED. FOR INSTANCE 1372mm [4'-6"]
7. THE EMPLACEMENT MAY BE MIRRORED FROM WHAT IS SHOWN HERE. IN ANY CASE, THE PROTECTED END OF THE EMPLACEMENT IS ALWAYS NEARER TO THE FIRING POINT AND THE ELECTRICAL BLOCKOUT IS ON THE PROTECTED END.
8. HORIZONTAL CONTROL POINT (F) IS LOCATED ON POWER SIDE OF TARGET.
9. LABEL EACH EMPLACEMENT. COORDINATE WITH RANGE CONTROL FOR NUMBERING SCHEME.

NOTES TO DESIGNER:

1. MINIMUM FRONT WALL HEIGHT IS 660mm (26"). THE FRONT WALL MUST BE HIGH ENOUGH TO PROTECT THE TARGETRY EQUIPMENT WHILE STILL ALLOWING MINIMUM OF 90% OF THE TARGET TO BE VISIBLE FROM THE FIRING POSITION. THE MINIMUM WALL HEIGHT OF 660mm (26") PROVIDES TARGET EQUIPMENT PROTECTION UP TO A 8° ANGLE OF FIRE. (THE TARGET ARMS AND CLAMP ARE NOT PROTECTED ABOVE 3°.) IT ALSO ALLOWS 90% VISIBILITY DOWN TO A -1° ANGLE OF FIRE. A GEOMETRIC ANALYSIS WILL BE REQUIRED FOR ANGLES OF FIRE GREATER THAN 8° OR LESS THAN -1°. THE HORIZONTAL DIRECTION OF FIRE MUST ALSO BE FACTORED INTO THE ANALYSIS. ANGLES OF FIRE OVER 8° MAY REQUIRE INCREASING THE HEIGHT OF THE FRONT WALL. ANGLES OF FIRE LESS THAN -1° MAY REQUIRE RAISING THE TARGET LIFTER OR INSTALLING LONGER TARGET ARMS. ON RANGES WHERE TARGETS ARE ENGAGED FROM MULTIPLE POINTS, THE DESIGNER MUST COORDINATE CLOSELY WITH THE INSTALLATION AND THE TARGETRY PROVIDER TO DETERMINE THE CORRECT FRONT WALL HEIGHT.
2. RETAINING WALLS SHALL BE CONSTRUCTED OF ADEQUATELY CONNECTED TIMBERS OR RAILROAD TIES (MAY BE PREFABRICATED) OR PRECAST OR CAST IN PLACE CONCRETE. FILTER FABRIC SHALL BE INSTALLED BEHIND ALL WOOD RETAINING WALLS. FILTER FABRIC SHALL EXTEND THE FULL HEIGHT OF THE WALL.
3. THE DESIGNER HAS THE OPTION TO USE THE BELOW GRADE EMPLACEMENT DESIGN TO PROVIDE MORE REALISTIC TRAINING. IF THE SITE CONDITIONS ARE NOT ADEQUATE TO SUPPORT POSITIVE DRAINAGE OF THE TARGET EMPLACEMENT, THE TOP OF THE SUBGRADE SHOULD HAVE A MINIMUM LONGITUDINAL SLOPE OF 2% TOWARD THE FRONT OF THE EMPLACEMENT.
4. REFER TO THE BERM THICKNESS FIGURES LOCATED IN THE DESIGN MANUAL TO DETERMINE REQUIRED BERM THICKNESS.
5. BERM SLOPES SHOWN AS 3:1 ARE TYPICAL. DIFFERENT SLOPES MAY BE REQUIRED BY THE SITE SPECIFIC GEOTECHNICAL REPORT.
6. FOR LOCATIONS REQUIRING DIRECTION OF FIRE FROM THE RIGHT OF THE TRACK CENTERLINE, PLANS AND SECTIONS SHOULD BE ANNOTATED FOR CONSTRUCTION IN A MIRROR IMAGE CONFIGURATION TO THAT SHOWN, WITH THE ELECTRICAL EQUIPMENT BEING PLACED AT THE END OF THE EMPLACEMENT NEAREST TO THE FIRING POSITION.
7. WHERE EMPLACEMENT IS SITED IN FRONT OF AN ARMOR TARGET, USE LARGER PROJECTILE TO DESIGN EMBANKMENT.

US Army Corps of Engineers

Rev. #	Description	Date	Approved

Designed by: | Date: | Rev.
Dwn by: | Ckd by: | Design file no.
Reviewed by: | Drawing code:
Submitted by: | File name: / Plot scale: / Plot date:

U. S. ARMY ENGINEERING AND SUPPORT CENTER, HUNTSVILLE
HUNTSVILLE, ALABAMA

MAY 2010

RANGE AND TRAINING LAND PROGRAM
STANDARD DESIGN MANUAL

MOVING INFANTRY TARGET
SURFACE / FILL EMPLACEMENT

Sheet reference number:
CD-03