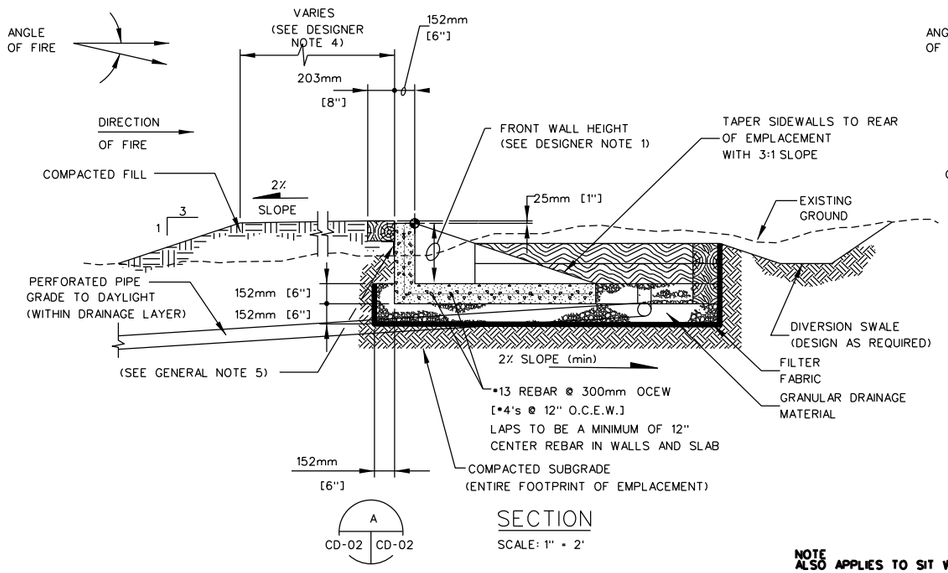

SECTION
SCALE: 1" = 2'

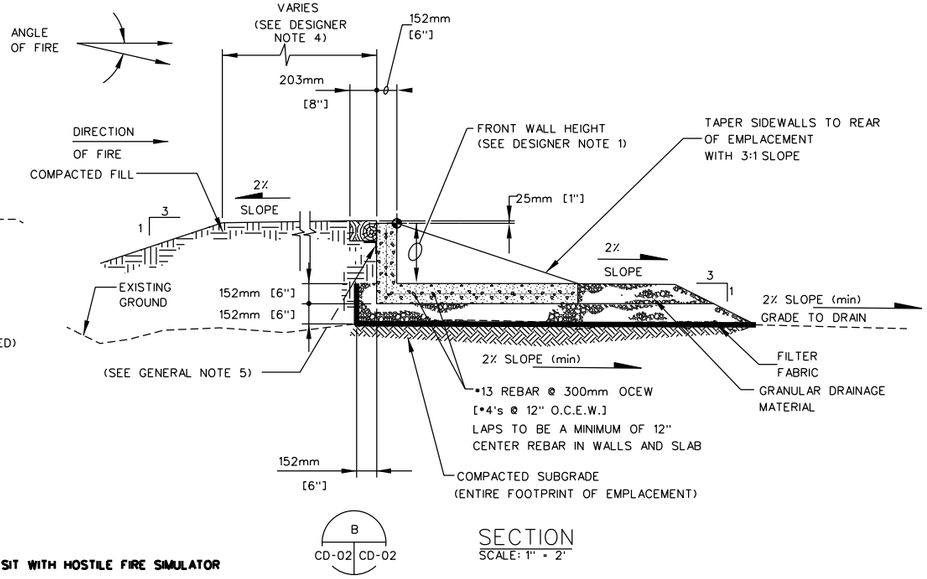

SECTION
SCALE: 1" = 2'

NOTE
ALSO APPLIES TO SIT WITH HOSTILE FIRE SIMULATOR

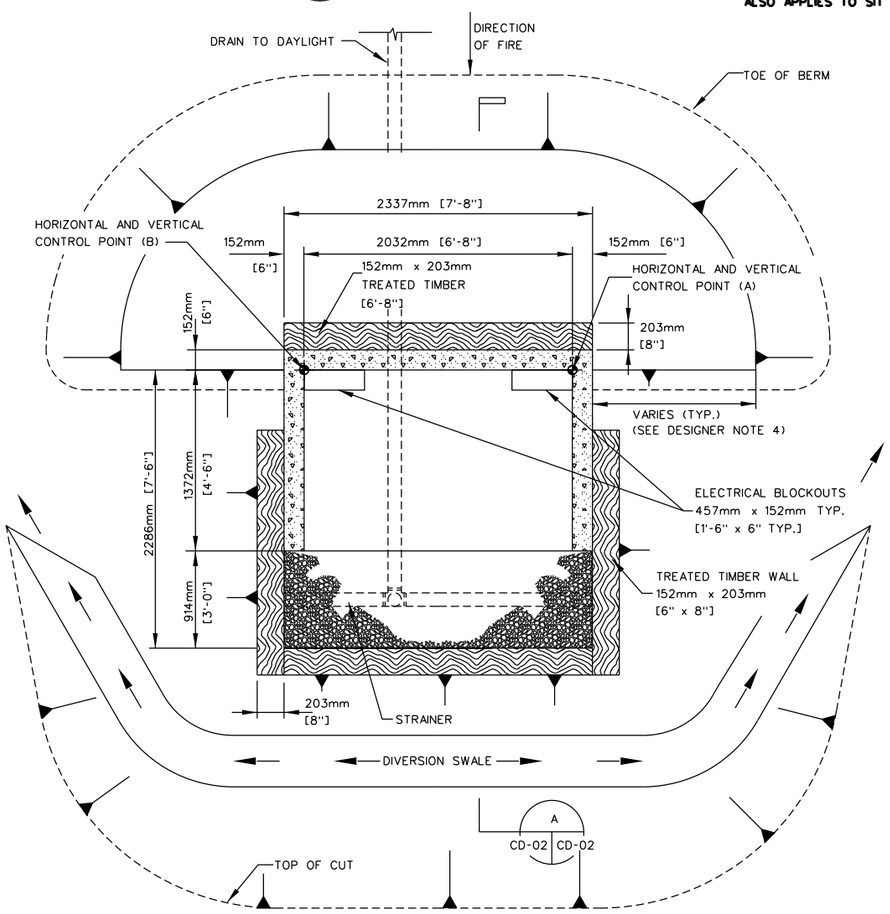

PLAN
ASCENDING SLOPE OR
BELOW GRADE EMPLACEMENT
SCALE: 1" = 2'

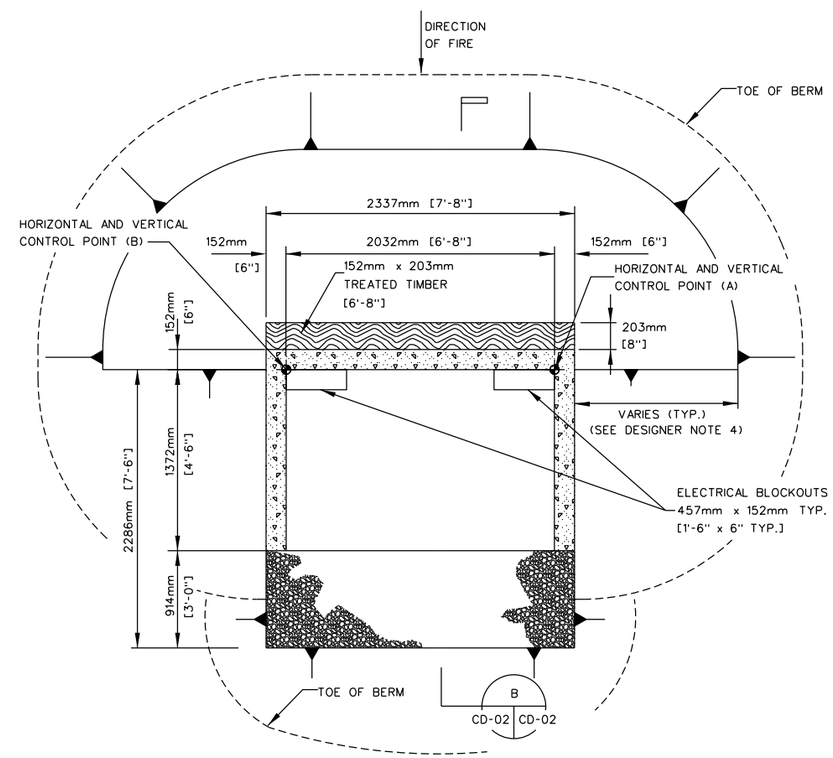

PLAN
SURFACE / FILL EMPLACEMENT
SCALE: 1" = 2'

GENERAL NOTES:

1. CONCRETE SHALL DEVELOP A MINIMUM COMPRESSIVE STRENGTH OF 28MPa (4000PSI) IN 28 DAYS.
2. EMPLACEMENTS SHALL BE CONSTRUCTED OF REINFORCED CONCRETE; CONCRETE STRUCTURES SHALL BE PRECAST OR CAST-IN-PLACE. PRECAST STRUCTURE WILL HAVE LIFTING EYES CUT FLUSH.
3. ALL REINFORCING STEEL SHALL BE PER ASTM A615, GRADE 60.
4. AREAS DISTURBED BY CONSTRUCTION ACTIVITIES SHALL BE REVEGETATED OR RESURFACED CONSISTENT WITH THE NATURAL SURROUNDINGS. GROUND COVER SHALL NOT REDUCE TARGET VISIBILITY.
5. PLACE RAILROAD TIES AGAINST CONCRETE WALL ON L102mm x 102MM x 12.7mm x 102mm [4"x4"x 1/2"x 4"] STEEL ANGLES SPACED A MAXIMUM OF 914mm [3'] ON CENTER. ATTACH ANGLE TO CONCRETE WITH CONCRETE ANCHORS.
6. ALL DIMENSIONS ARE INDICATED AS FOLLOWS: METRIC UNITS [ENGLISH] FOR INSTANCE, 1372mm [4'-6"]
7. HORIZONTAL CONTROL POINT (A) IS LOCATED ON THE LEFT SIDE OF TARGET AS VIEWED FROM THE FIRING POSITION.
8. PROVIDE 13mm [1/2"] CHAMFER ON ALL EXPOSED CONCRETE SURFACES.
9. LABEL EACH EMPLACEMENT. COORDINATE WITH RANGE CONTROL FOR NUMBERING SCHEME.

NOTES TO DESIGNER:

1. MINIMUM FRONT WALL HEIGHT IS 457mm [18"]. THE FRONT WALL MUST BE HIGH ENOUGH TO PROTECT THE TARGETRY EQUIPMENT WHILE STILL ALLOWING A MINIMUM OF 90% OF THE TARGET TO BE VISIBLE FROM THE FIRING POSITION. THE MINIMUM WALL HEIGHT OF 457mm [18"] PROVIDES TARGET EQUIPMENT PROTECTION UP TO A 10° ANGLE OF FIRE. (THE TARGET ARMS AND CLAMP ARE NOT PROTECTED ABOVE 10°.) IT ALSO ALLOWS 90% VISIBILITY DOWN TO A -2° ANGLE OF FIRE. A GEOMETRIC ANALYSIS WILL BE REQUIRED FOR ANGLES OF FIRE GREATER THAN 10° OR LESS THAN -2°. EXCESSIVE ANGLES OF FIRE MAY REQUIRE INCREASING THE HEIGHT OF THE FRONT WALL OR INSTALLING THE EMPLACEMENT OFF-LEVEL AT AN ANGLE THAT MATCHES THE ANGLE OF FIRE. ANGLES OF FIRE LESS THAN -2° MAY REQUIRE RAISING THE TARGET LIFTER, INSTALLING LONGER TARGET ARMS OR INSTALLING THE EMPLACEMENT OFF-LEVEL AT AN ANGLE THAT MATCHES THE ANGLE OF FIRE. THE DESIGNER MUST DEMONSTRATE DURING THE COURSE OF DESIGN THAT THE TARGETS ARE VISIBLE AND THAT THE ENTIRE CONCRETE EMPLACEMENT IS PROTECTED FROM DIRECT FIRE. ON RANGES WHERE TARGETS ARE ENGAGED FROM MULTIPLE POINTS, THE DESIGNER MUST COORDINATE CLOSELY WITH THE INSTALLATION AND THE TARGETRY PROVIDER TO DETERMINE THE CORRECT FRONT WALL HEIGHT.
2. RETAINING WALLS SHALL BE CONSTRUCTED OF ADEQUATELY CONNECTED TIMBERS OR RAILROAD TIES (MAY BE PREFABRICATED). FILTER FABRIC SHALL BE INSTALLED BEHIND ALL WOOD RETAINING WALLS. FILTER FABRIC SHALL EXTEND THE FULL HEIGHT OF THE WALL.
3. IF OPTIONAL BELOW GRADE EMPLACEMENT IS USED THE DESIGNER MUST ENSURE POSITIVE DRAINAGE AWAY FROM EMPLACEMENT IS PROVIDED.
4. REFER TO THE BERM THICKNESS FIGURES LOCATED IN THE DESIGN MANUAL TO DETERMINE REQUIRED BERM THICKNESS.
5. BERM SLOPES SHOWN AS 3:1 ARE TYPICAL. DIFFERENT SLOPES MAY BE REQUIRED BY THE SITE SPECIFIC GEOTECHNICAL REPORT.
6. IF EMPLACEMENT IS SITED NEAR AN ARMOR TARGET, USE LARGER PROJECTILE TO DESIGN BERM THICKNESS.

GRAPHIC SCALE:
2 0 2 4
SCALE: 1" = 2'

WIDENED STATIONARY INFANTRY TARGET EMPLACEMENT

US Army Corps of Engineers

Rev. #	Description	Date	Approved

Designed by: | Date: | Rev.
Dwn by: | Ckd by: | Design file no.
Reviewed by: | Drawing code:
Submitted by: | File name: / Plot scale: / Plot date:

U. S. ARMY ENGINEERING AND SUPPORT CENTER, HUNTSVILLE
HUNTSVILLE, ALABAMA

JULY 2011

RANGE AND TRAINING LAND PROGRAM
STANDARD DESIGN MANUAL

WIDENED STATIONARY INFANTRY
TARGET EMPLACEMENT

Sheet reference number:
CD-02

Sheet of