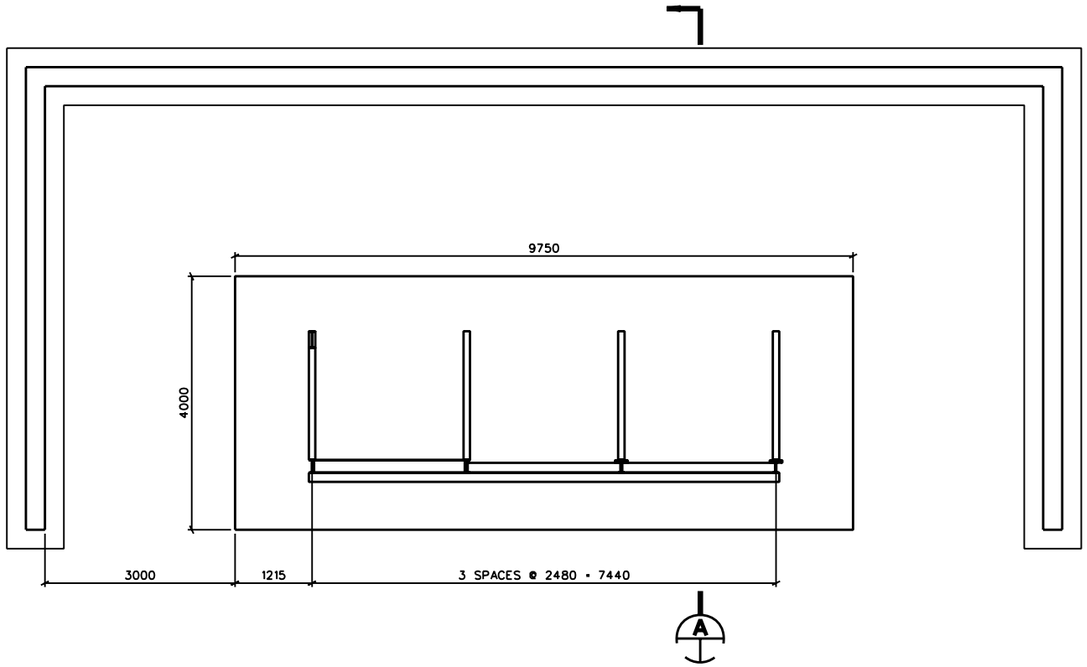

WALL BREACH - PLAN VIEW

SCALE : 1:50

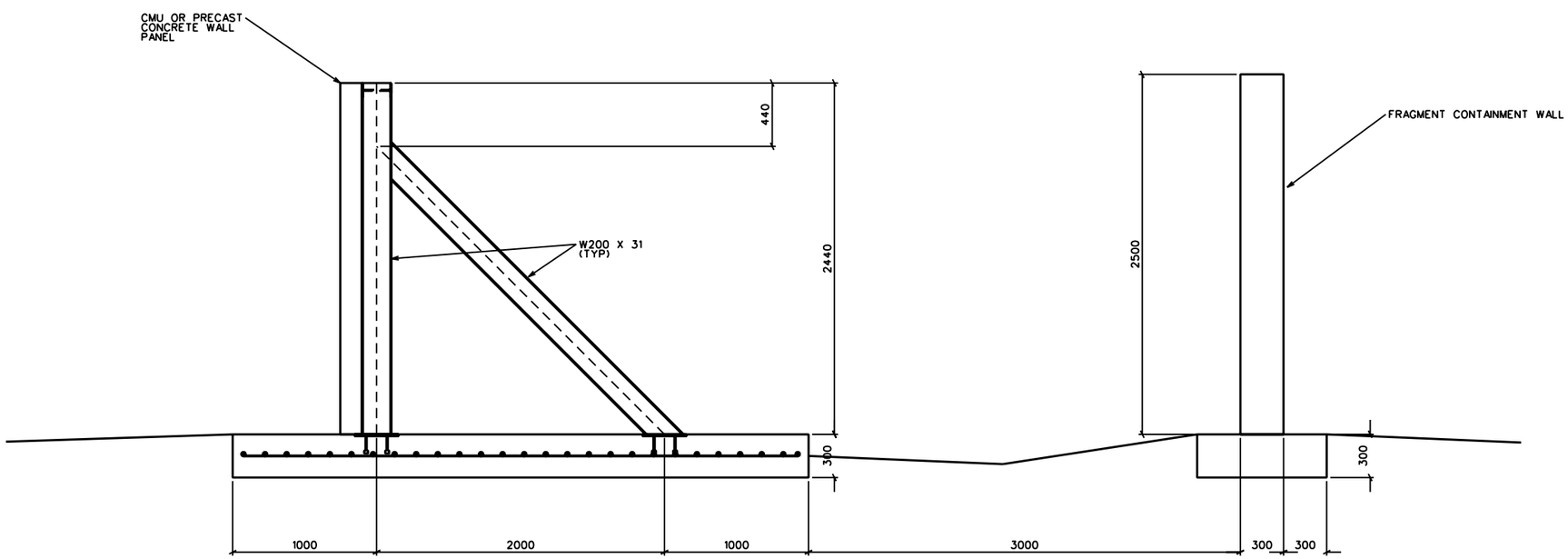

SECTION A

SCALE : 1:20

US Army Corps of Engineers

Rev.	Description	Date	Approved

Designed by: | Date: | Rev.
Dwn by: | Ckd by: | Design file no.
Reviewed by: | Drawing code:
Submitted by: | File name: Plot date: Plot scale:

U. S. ARMY ENGINEERING AND SUPPORT CENTER, HUNTSVILLE
HUNTSVILLE, ALABAMA

15 APR 2005

RANGE AND TRAINING LAND PROGRAM
STANDARD DESIGN MANUAL

FCC= 17904
BREACH FACILITY
STATION 1 - WALL BREACH

Sheet reference number:
BCH-A-03