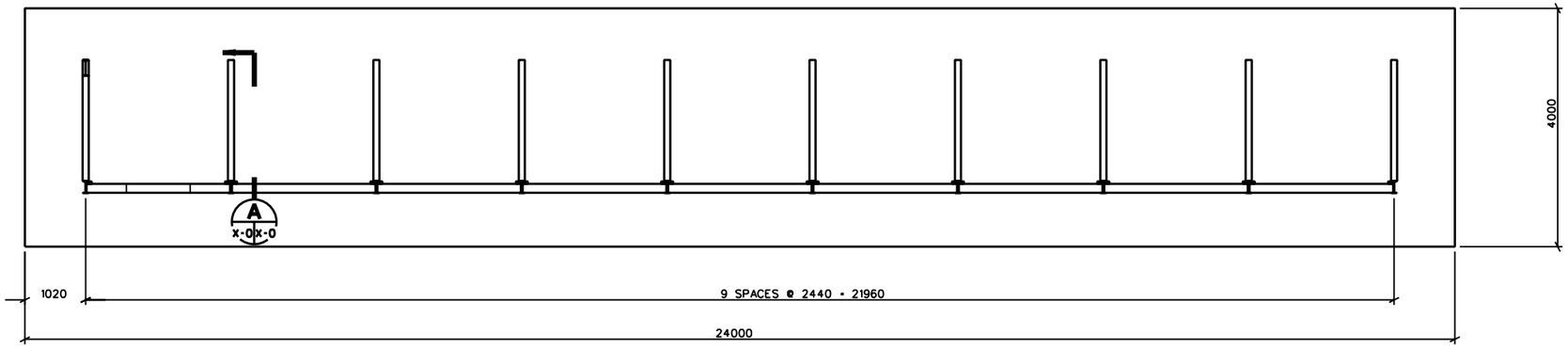


## WINDOW BREACH - PLAN VIEW

SCALE : 1:50

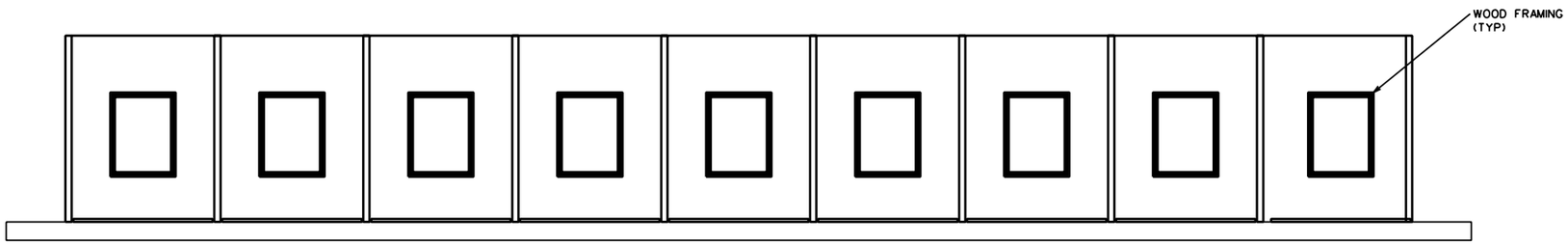


## WINDOW BREACH - ELEVATION

SCALE : 1:50

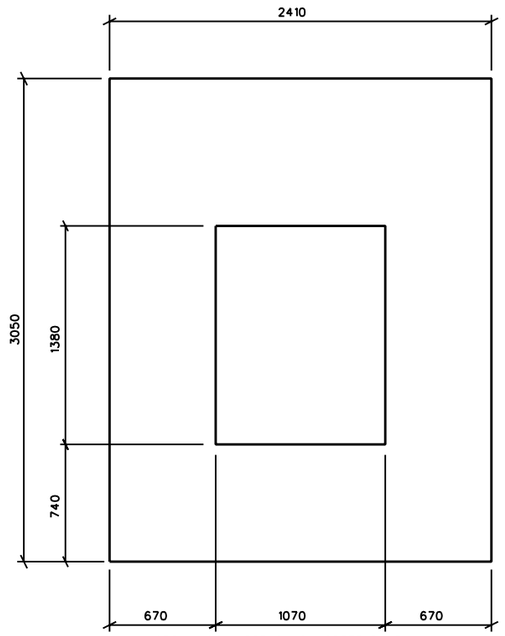


NOTE: WINDOW BREACH CONCRETE PANEL
MAY BE CAST THE SAME AS THE DOOR BREACH
THEN FRAMED IN WITH WOOD

## CONCRETE PANEL

SCALE : 1:20

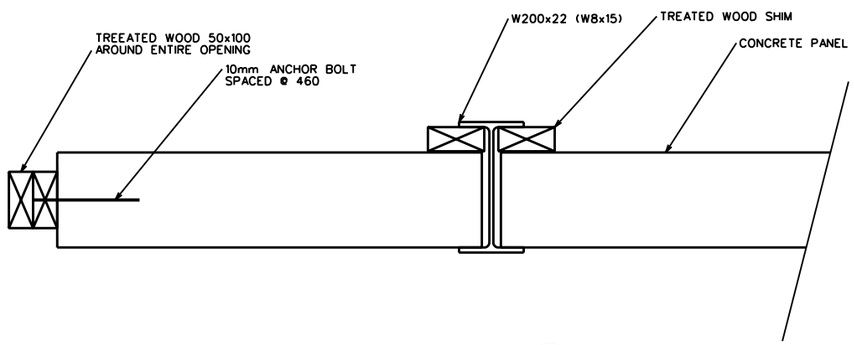


## SECTION B x-0x-0

SCALE : 1:10

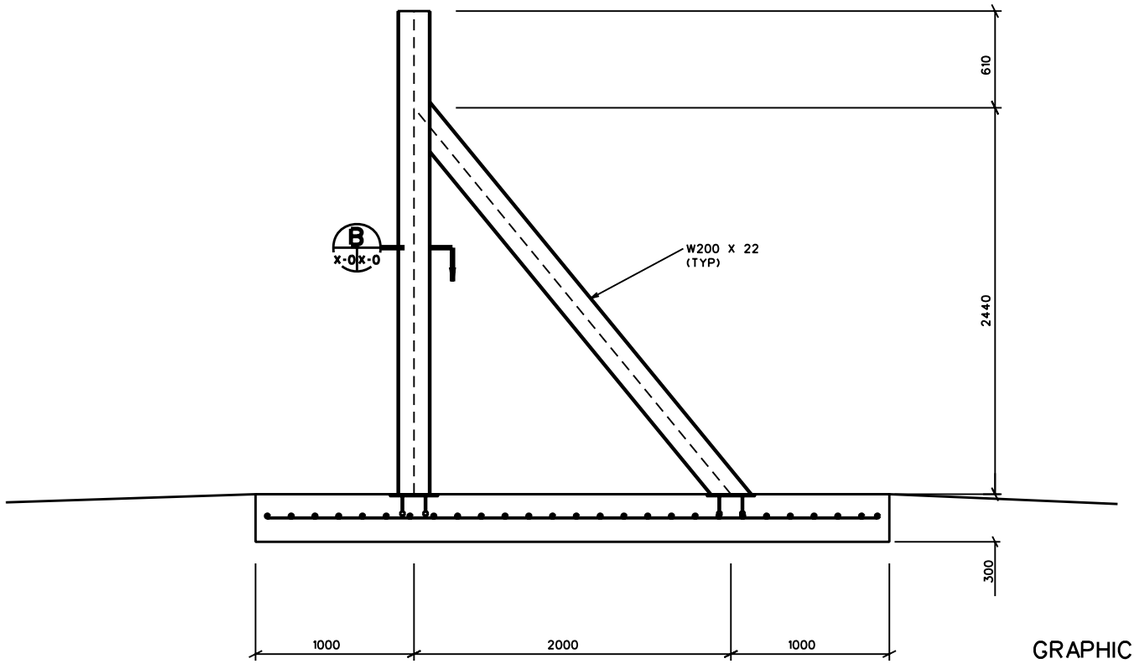


## SECTION A x-0x-0

SCALE : 1:20

GRAPHIC SCALES

1:5 — 100 50 0 100 200

1:10 — 200 100 0 200 400

1:50 — 1000 500 0 1000 2000

US Army Corps of Engineers

| Rev. | Description | Date | Approved |
|---|---|---|---|
| Rev. * | | | |

Designed by: | Date: | Rev.
Dwn by: | Ckd by: | Design file no.
Reviewed by: | Drawing code:
Submitted by: | File name: / Plot scale: / Plot date:

U. S. ARMY ENGINEERING AND SUPPORT CENTER, HUNTSVILLE
HUNTSVILLE, ALABAMA

15 APR 2005

RANGE AND TRAINING LAND PROGRAM
STANDARD DESIGN MANUAL

FCC: 17904
BREACH FACILITY
STATION 1 - WINDOW BREACH

Sheet reference number:
BCH-A-02