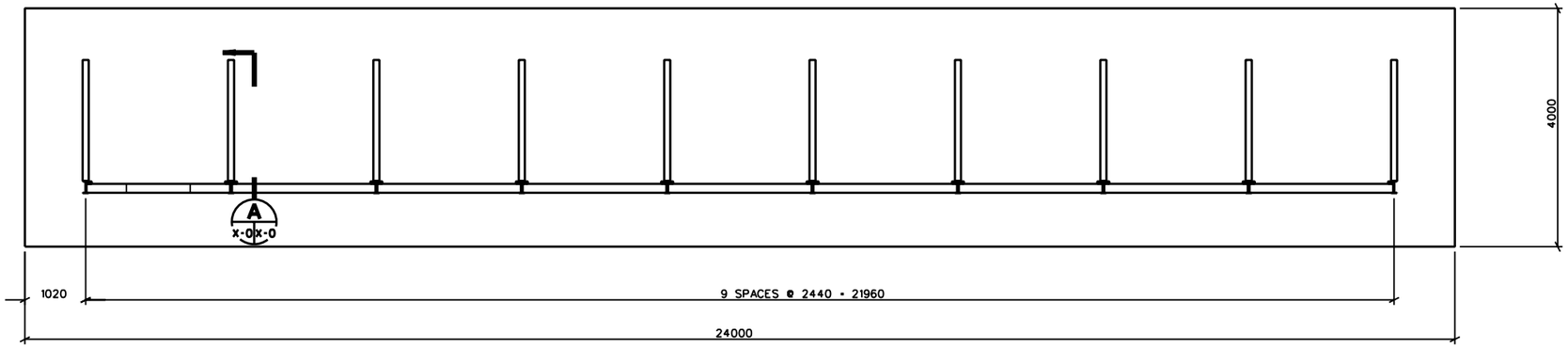

DOOR BREACH - PLAN VIEW
SCALE : 1:50

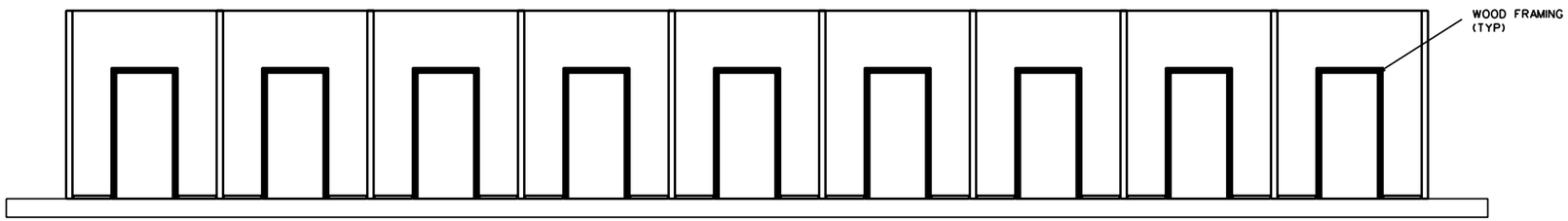

DOOR BREACH - ELEVATION
SCALE : 1:50

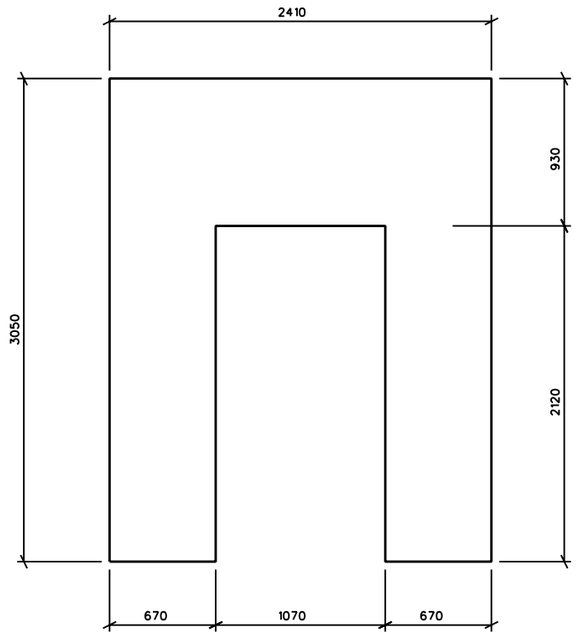

CONCRETE PANEL
SCALE : 1:20

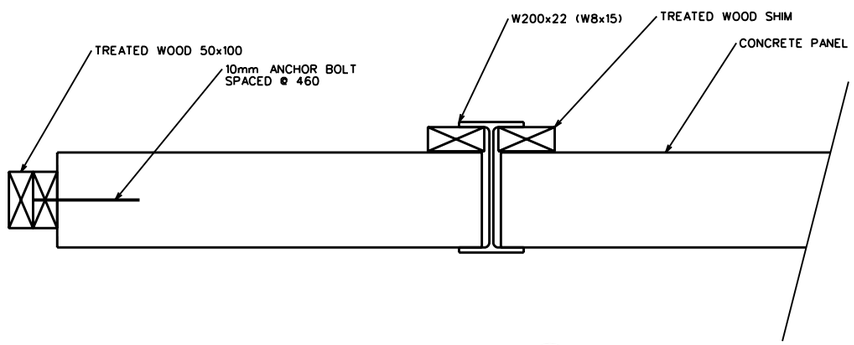

SECTION B
SCALE : 1:10

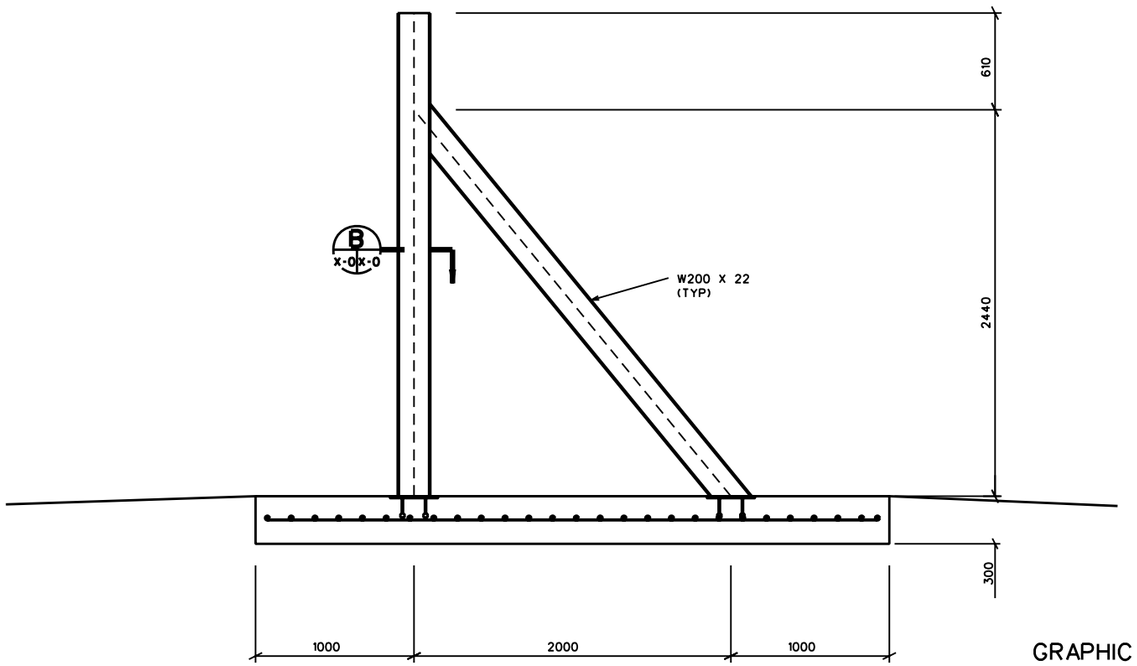

SECTION A
SCALE : 1:20

GRAPHIC SCALES

1:5 — 100 50 0 100 200

1:10 — 200 100 0 200 400

1:50 — 1000 500 0 1000 2000

US Army Corps of Engineers

Rev.	Description	Date	Approved
*			

Designed by: | Date: | Rev.
Dwn by: | Ckd by: | Design file no.
Reviewed by: | Drawing code:
Submitted by: | File name: / Plot date: / Plot scale:

U. S. ARMY ENGINEERING AND SUPPORT CENTER, HUNTSVILLE
HUNTSVILLE, ALABAMA

15 APR 2005

RANGE AND TRAINING LAND PROGRAM
STANDARD DESIGN MANUAL

FCC= 17904
BREACH FACILITY
STATION 1 - DOOR BREACH

Sheet reference number:
BCH-A-01