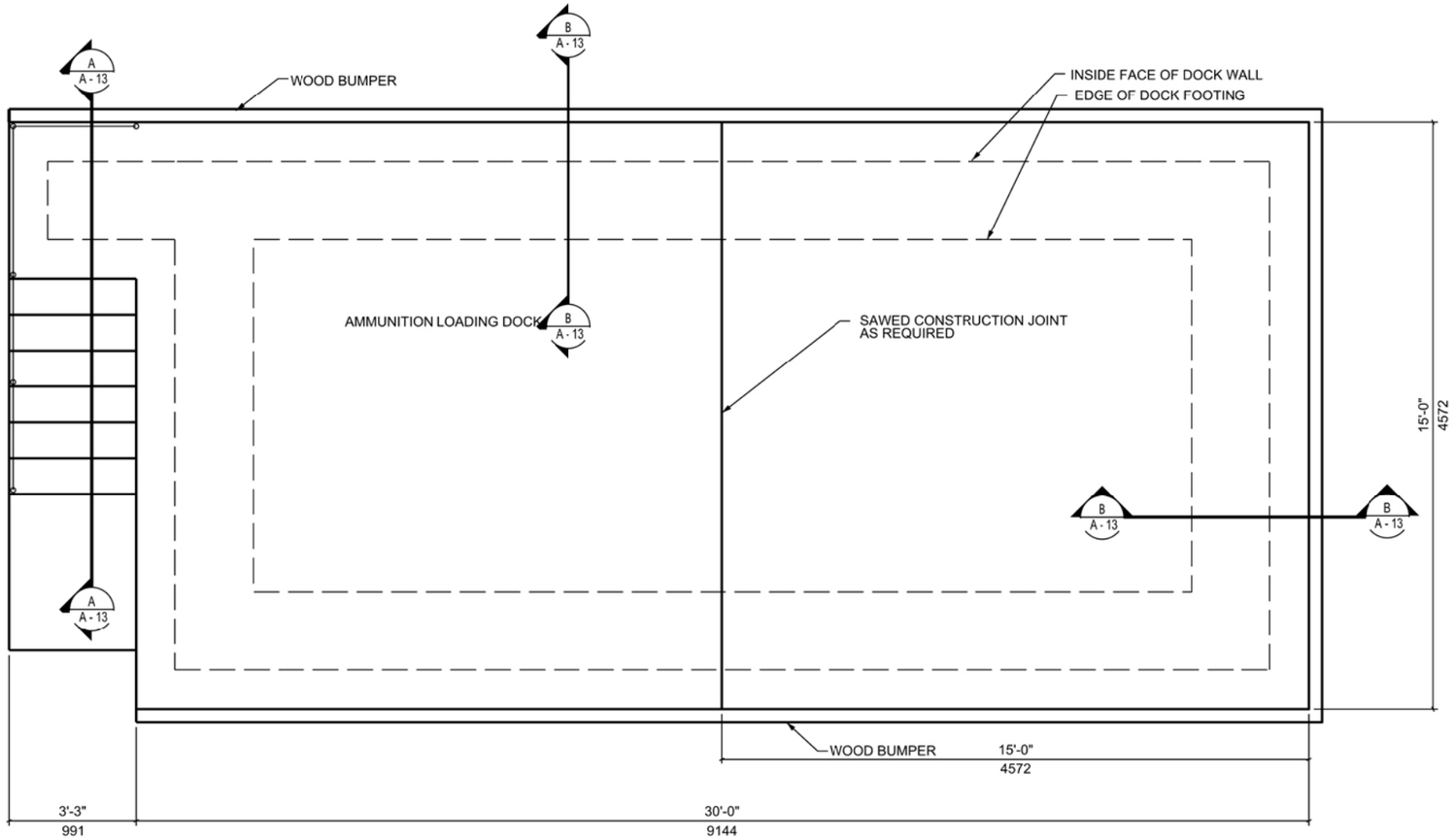

FLOOR PLAN

SCALE: 1/2" = 1'-0"

NOTE: SITING MUST BE IAW DA PAM 385-64, EXPLOSIVES SAFETY.

LIGHTNING PROTECTION MUST BE IAW DA PAM 385-64, EXPLOSIVES SAFETY.

UNLABELED DIMENSIONS ARE IN mm

CONCRETE THICKNESSES AND REBAR SHOWN ARE FOR REFERENCE ONLY LOADING DOCK MUST BE DESIGNED TO LOCAL CONDITIONS (STRUCTURAL AND GEOTECH)

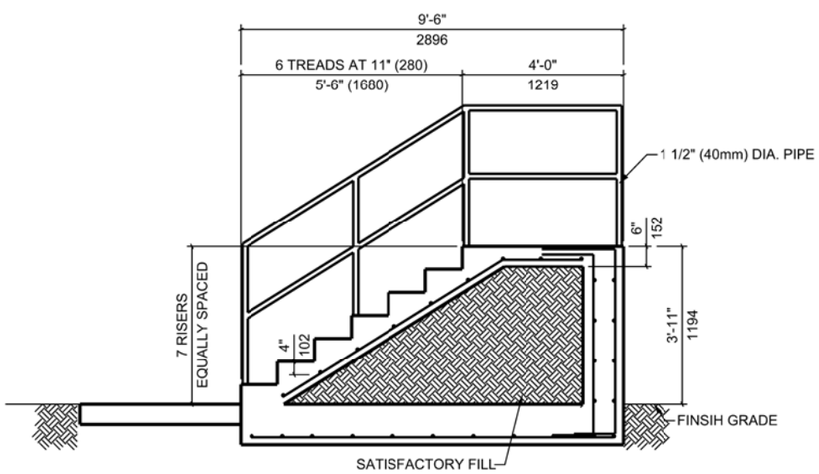

SECTION

A / A-13

SCALE: 1/2" = 1'-0"

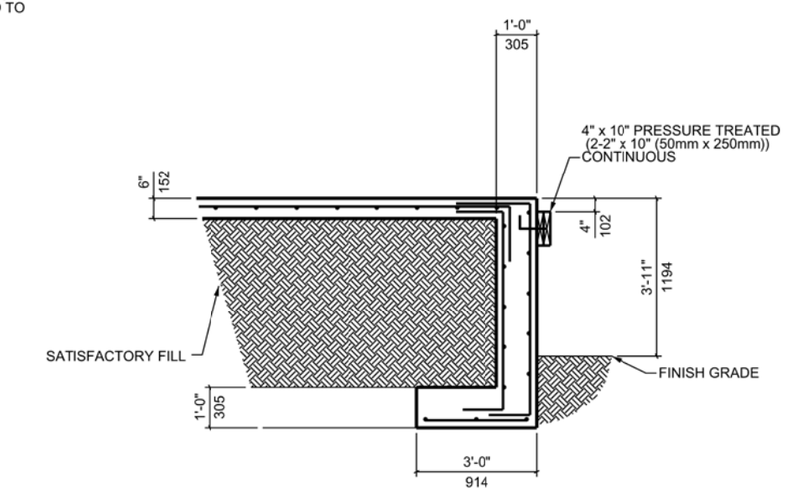

SECTION

B / A-13

SCALE: 1/2" = 1'-0"

2' 1' 0 2' 4' 6'

GRAPHIC SCALE: 1/2"=1'-0"

US Army Corps of Engineers

Rev #	Description	Date	Approved

Designed by: | Date: | Rev.

Dwn by: | Ckd by: | Design file no.

Reviewed by: | Drawing code:

Submitted by: | File name: Plot date: Plot scale:

U. S. ARMY ENGINEERING AND SUPPORT CENTER, HUNTSVILLE
HUNTSVILLE, ALABAMA

SEPTEMBER 2010

RANGE AND TRAINING LAND PROGRAM
STANDARD DESIGN MANUAL

AMMUNITION LOADING DOCK

Sheet reference number:

A–16