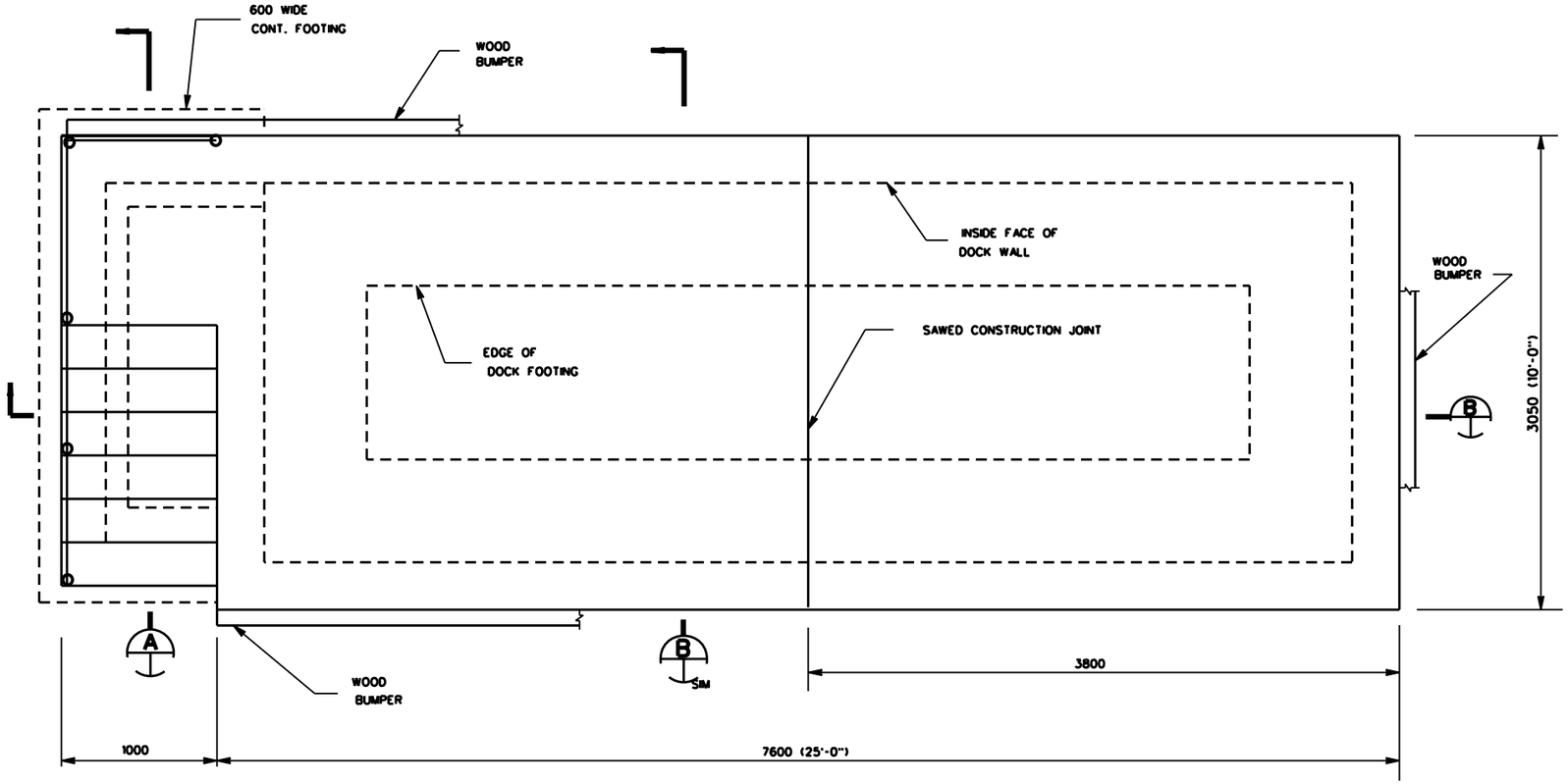

PLAN - AMMO LOADING DOCK

SCALE: 1:40

NOTES

1. ALL DIMENSIONS ARE IN MILLIMETERS UNLESS OTHERWISE NOTED.

NOTES TO DESIGNER

1. DOCK IS DESIGNED TO LOAD 2 VEHICLES AT A TIME. DOCK SIZE MAY NEED TO BE INCREASED ON LARGE RANGES WITH A HIGH THROUGHPUT REQUIREMENT
2. A COVER MAY BE REQUIRED IN HOT CLIMATES

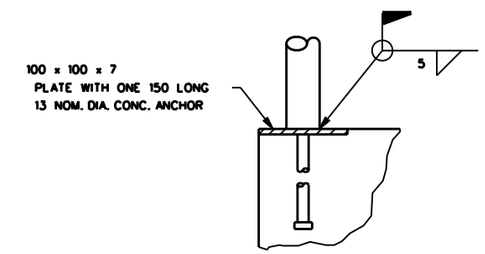

DETAIL 1

SCALE : N.T.S.

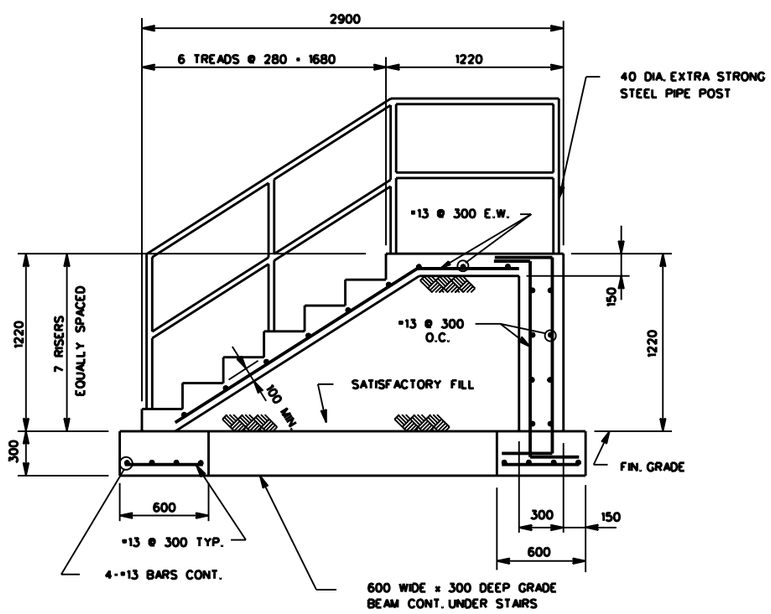

SECTION A

SCALE : N.T.S.

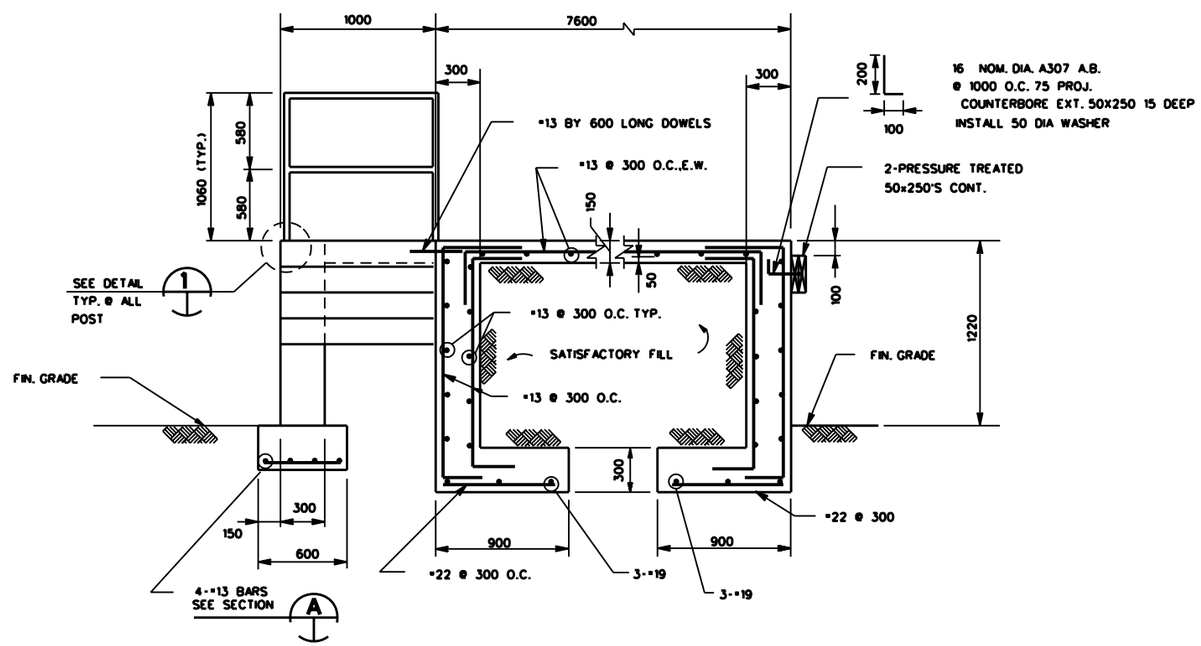

SECTION B

SCALE : N.T.S.

GRAPHIC SCALES

1:40 800 400 0 800 1600

US Army Corps of Engineers

Rev.	Description	Date	Approved

Designed by: | Dwn by: | Ckd by: | Reviewed by: | Submitted by: | Date: | Rev.

Design file no.

Drawing code: S10 179 90-01

File name:
Plot date:
Plot scale:

U. S. ARMY ENGINEERING AND SUPPORT CENTER, HUNTSVILLE
HUNTSVILLE, ALABAMA

15 MAY 2007

RANGE AND TRAINING LAND PROGRAM
STANDARD DESIGN MANUAL

AMMO LOADING DOCK

Sheet reference number:
A-13

Sheet of