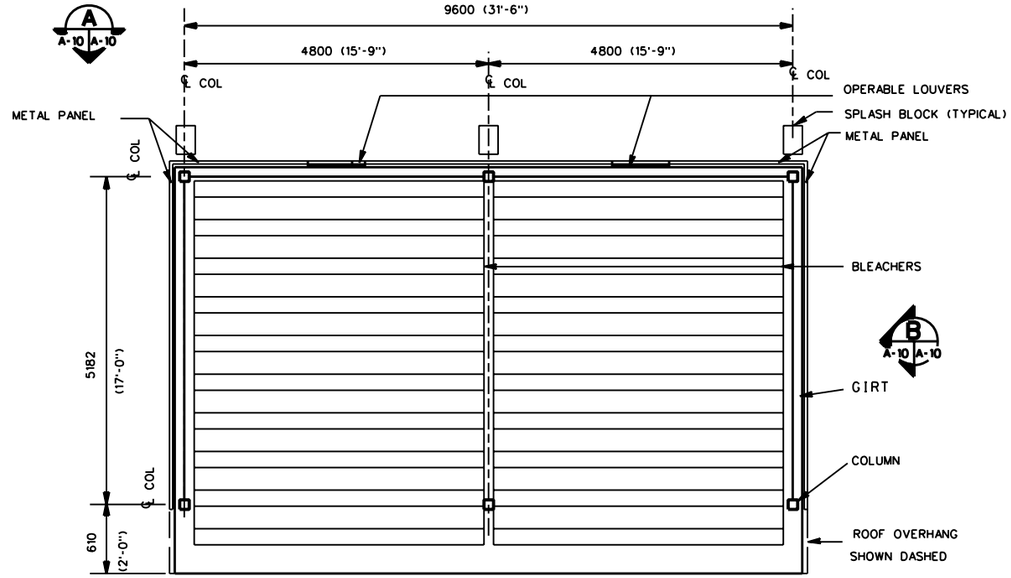

PLAN

SCALE : 1:100

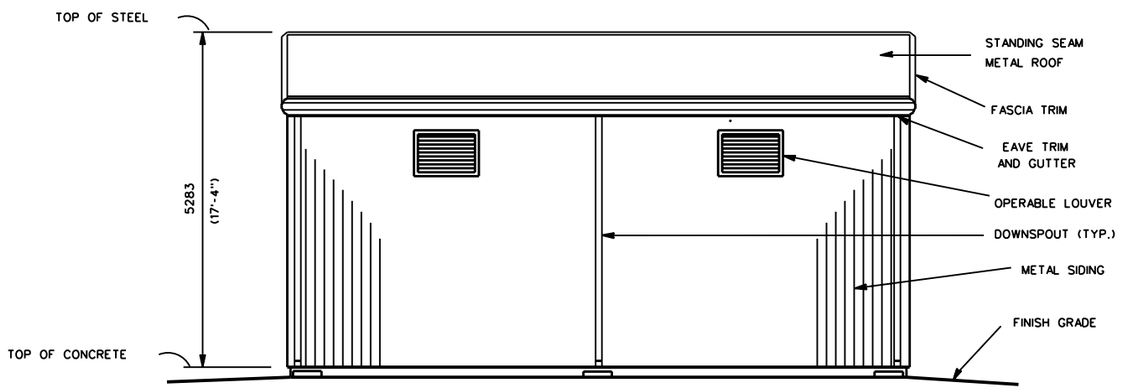

ELEVATION A (A-10 / A-10)

SCALE : 1:100

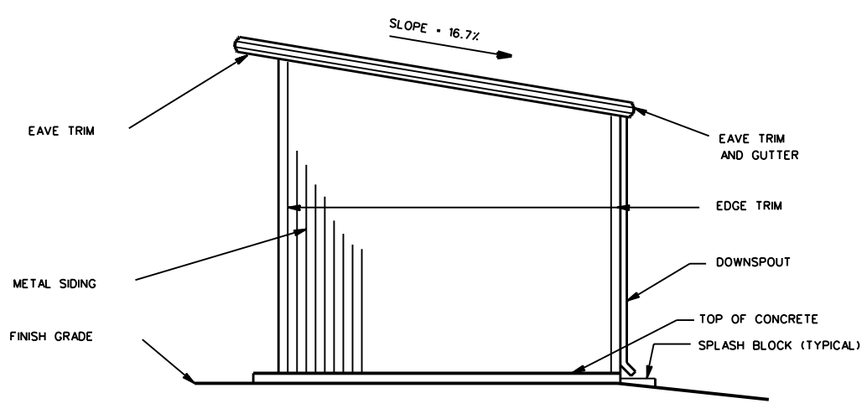

ELEVATION B (A-10 / A-10)

SCALE : 1:100

GENERAL

The Bleacher Enclosure provides an area for troop instruction before and after training exercises. The covered facility has a concrete floor and is enclosed on three sides for weather protection. The remaining side is left open to view the firing line and downrange areas. The enclosure is 49.75 square meters (535.5 square feet) in area. Two sets of bleachers are installed each having 10 rows and a length of 4.6 meters (15 feet). The bleachers provide seating for 160 troops.

For service school ranges that require seating for 240 troops add an additional bay and set of bleachers (see TC25-8 for a list of applicable ranges). The enclosure size becomes 74.6 square meters (803 square feet).

SITE ADAPTATION

This standard definitive design should be adapted to local conditions such as climate, topography, seismic zone, available construction materials and techniques and the existing character of surrounding buildings. These factors may affect plans and elevations. The building foundation must be designed based on the results of a geotechnical investigation.

REFERENCE CRITERIA

The design and construction must comply with applicable codes and standards including: technical instruction TI 800-01, "Design Criteria"; Department of the Army regulations, technical manuals, handbooks, standards, and specifications.

FUNCTIONAL REQUIREMENTS

All dimensions not labeled are in millimeters. Louvers are included to provide natural ventilation. Gutters, downspouts and splash blocks should be provided where required by climatic conditions. Ice guards may be necessary in northern climates.

The Bleacher Enclosure is accessed only by able-bodied personnel and does not require ADA compliance unless dictated by local criteria.

MECHANICAL

No mechanical systems are required for the Bleacher Enclosure.

ELECTRICAL

The bleacher enclosure shall be served by 120/240V, 1 phase, 3-wire secondary power. Rigid Steel Conduit shall extend a minimum of 1524mm (5') outside the building for power circuits entering and leaving the building. Voltage drop shall comply with NEC standards and Army technical manuals.
Grounding will be installed in accordance with NFPA 70, the NEC, and other applicable standards.
The panel board shall be 120/240V single phase, mounted inside the building. Receptacles shall be general purpose, GFCI, 120V, 20A Duplex mounted a minimum of 450mm (18") above the finished floor.
Illumination levels will be designed in accordance with IES. Interior lighting shall consist of white lamps providing a level of 15 foot-candles and red lamps for lower level night light.
Separate switching shall be provided for white lamps and red lamps.
The emergency electrical system shall comply with NFPA 70 and NFPA 101.
Provide a mast style lightning protection system for safe cover of personnel.

FIRE PROTECTION

Fire Protection is not required per fire codes for this building. Consult local Fire Marshall for compliance with local laws.

GRAPHIC SCALES

1:100 1000 500 0 1000 2000

US Army Corps of Engineers

Rev. *	Description	Date	Approved

Designed by: | Date: | Rev.
Dwn by: | Ckd by: | Design file no.
Reviewed by: | Drawing code: STD 179-72-01
Submitted by: | File name: STD48.DGN | Plot date: | Plot scale:

U. S. ARMY ENGINEERING AND SUPPORT CENTER, HUNTSVILLE
HUNTSVILLE, ALABAMA

28 MAR 2008

RANGE AND TRAINING LAND PROGRAM
STANDARD DESIGN MANUAL

BLEACHER ENCLOSURE

Sheet reference number:
A -10