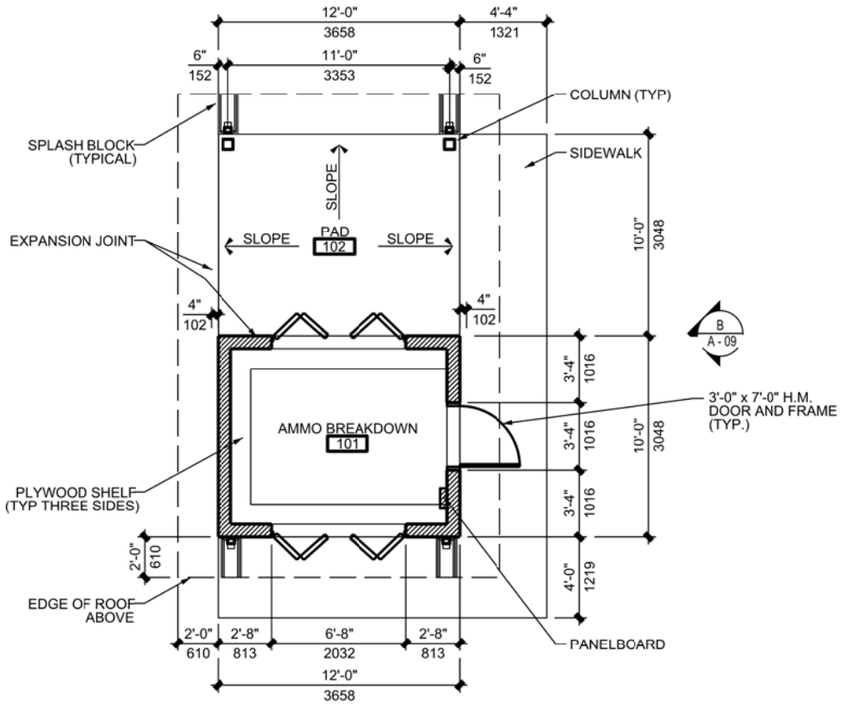


## FLOOR PLAN

SCALE: 1/4" = 1'-0"

A
A - 09

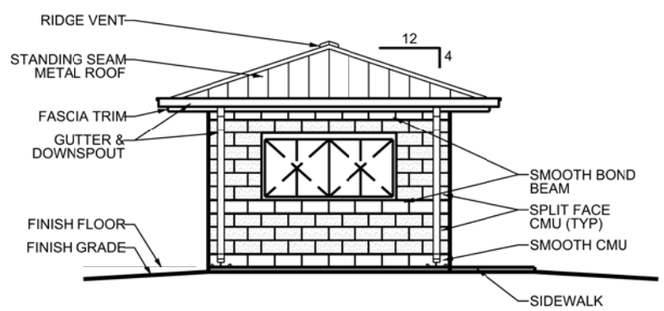


A
A - 09

## ELEVATION

SCALE: 1/4" = 1'-0"

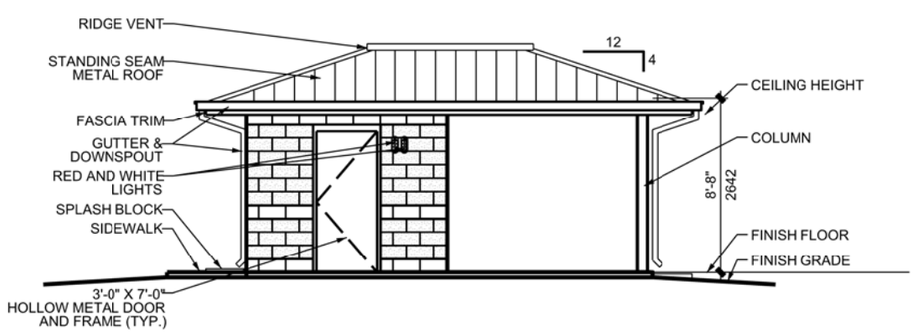


A
A - 09

## ELEVATION

SCALE: 1/4" = 1'-0"

General

The Ammunition Breakdown Building provides space for breaking down and issuing ammunition to the personnel involved in range training exercises. Although the building is not intended for ammunition storage, if end user determines that storage of ammunition may be required, the design must meet the requirements of DA PAM 385-64. A canopy is provided at one of the issuing windows to protect personnel during periods of inclement weather. The enclosed area required for the ammunition breakdown building is 184 square feet (17.1 square meters).

Site Adaptation

This standard definitive design should be adapted to local conditions such as climate, available construction materials and techniques, topography, seismic zone and the existing character of surrounding buildings. These factors may affect plans, elevations, and building systems. The building foundation must be designed based on the results of a geotechnical investigation. The siting of this building shall be in accordance with Small Arms Explosive Safety requirements DA PAM 385-64. Buildings should be a minimum of 50 feet from all other buildings and 100 feet from occupied buildings.

Reference Criteria

The design and construction must comply with applicable codes and standards including: technical instruction TI 800-01, "Design Criteria" Departments of the Army regulations, technical manuals, handbooks, standards, and specifications.

Functional Requirements

All dimensions not labeled are in feet and inches. Issuing windows are hollow metal door panels secured with flush bolts and overlapping astragals. Windows have forced entry resistant metal frames. Gutters, downspouts and splash blocks should be provided where required by climatic conditions. Ice guards may be necessary in northern climates. Ceilings should be finished.
The Ammo Breakdown Building is accessed only by able-bodied personnel and does not require ADA compliance unless by local criteria.

Mechanical

No mechanical systems are required for the Ammo Breakdown Building.

Electrical

The Ammo Breakdown Building shall be served by 120/240V, 1 phase, 3-wire secondary power. Rigid Steel conduit shall extend a minimum of 5' (1524mm) outside the building for power and communication circuits entering and leaving the building.
The panelboard shall be 120/240V single phase, mounted inside building. Illumination levels will be designed in accordance with IES. Fixtures with red lamps on separate switching shall be placed near each white incandescent lamp. Incandescent fixtures shall be gasket, vapor proof enclosed with guard. Exterior white and red lighting shall be provided with separate switching located near the points of egress.

Explosion-proof fixtures: Fixtures are not required to be explosion proof unless end users determine that there is a need to store ammunition in the facility.
A telephone system is not required.

Mast type lightning protection in accordance with DA PAM 385-64 is required for this building.

Fire Protection

Fire protection is not required per fire codes for this building. The fire alarm shall be a local audible alarm. Fire extinguisher's and cabinets are required per NFPA. Consult local Fire Marshall for compliance with local requirements. Provide a Mass Notification system per UFC.

4' 2' 0 4' 8' 12'
GRAPHIC SCALE: ¼"=1'-0"

US Army Corps of Engineers

| Rev. | Description | Date | Approved |
|---|---|---|---|
| | | | |

Designed by: | Date: | Rev.
Dwn by: | Ckd by: | Design file no.
Reviewed by: | Drawing code:
Submitted by: | File name / Plot scale / Plot scale:

U. S. ARMY ENGINEERING AND SUPPORT CENTER, HUNTSVILLE
HUNTSVILLE, ALABAMA

MARCH 2011

RANGE AND TRAINING LAND PROGRAM
STANDARD DESIGN MANUAL

AMMUNITION BREAKDOWN BUILDING

Sheet reference number:
A–09

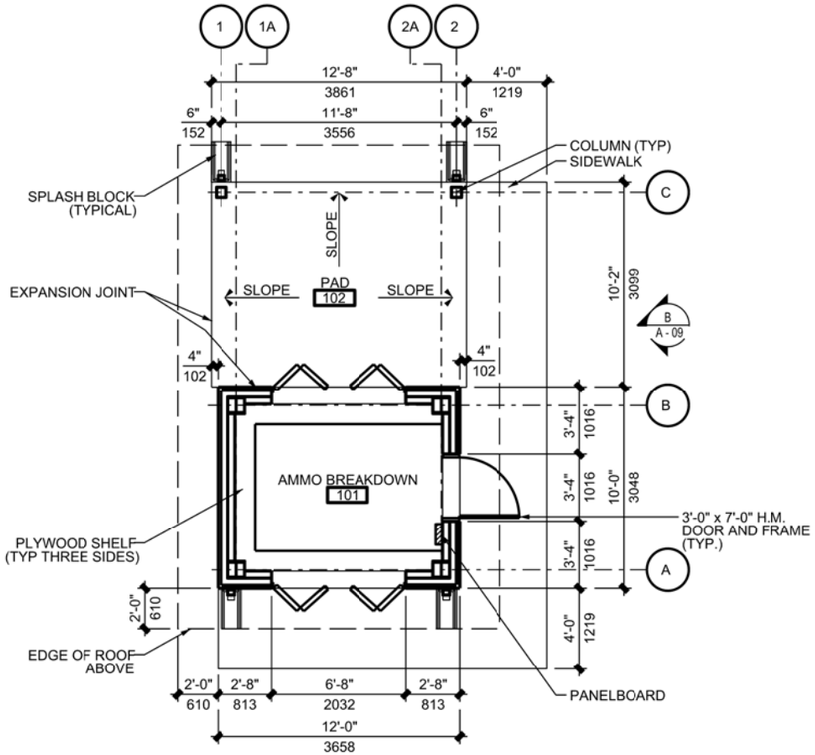


## FLOOR PLAN

SCALE: 1/4" = 1'-0"

A
A-09

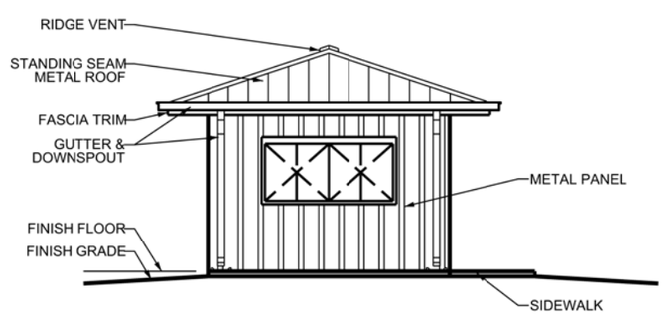


A
A-09

## ELEVATION

SCALE: 1/4" = 1'-0"

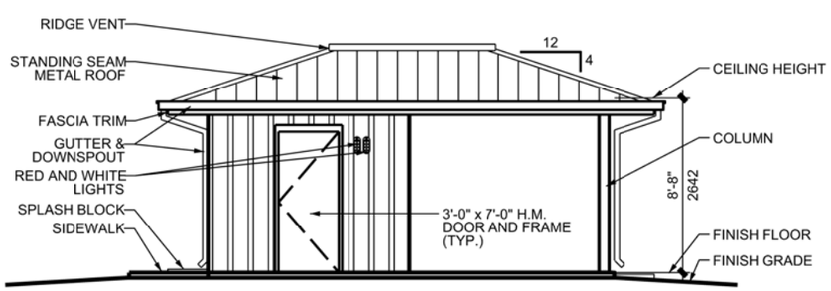


B
A-09

## ELEVATION

SCALE: 1/4" = 1'-0"

General

The Ammo Breakdown Building provides space for breaking down and issuing ammunition to the personnel involved in range training exercises. Although the building is not intended for ammunition storage, if end user determines that storage of ammunition may be required, the design must meet the requirements of DA PAM 385-64. A canopy is provided at one of the issuing windows to protect personnel during periods of inclement weather. The enclosed area required for the ammunition breakdown building is 120 square feet (11 square meters).

Site Adaptation

This standard definitive design should be adapted to local conditions such as climate, available construction materials and techniques, topography, seismic zone and the existing character of surrounding buildings. These factors may affect plans, elevations, and building systems. The building foundation must be designed based on the results of a geotechnical investigation. The siting of this building shall be in accordance with Small Arms Explosive Safety requirements DA PAM 385-64. Buildings should be a minimum of 50 feet from all other buildings and 100 feet from substantial buildings.

Reference Criteria

The design and construction must comply with applicable codes and standards including: technical instruction TI 800-01. "Design Criteria" Departments of the Army regulations, technical manuals, handbooks, standards, and specifications.

Functional Requirements

All dimensions not labeled are in feet and inches. Issuing windows are hollow metal door panels secured with flush bolts and overlapping astragals. Windows have forced entry resistant metal frames. Gutters, downspouts and splash blocks should be provided where required by climatic conditions. Ice guards may be necessary in northern climates. Ceilings should be finished.
The Ammo Breakdown Building is accessed only by able-bodied personnel and does not require ADA compliance unless by local criteria.

Mechanical

No mechanical systems are required for the Ammo Breakdown Building.

Electrical

The Ammo Breakdown Building shall be served by 120/240V, 1 phase, 3-wire secondary power. Rigid Steel conduit shall extend a minimum of 5' (1524mm) outside the building for power and communication circuits entering and leaving the building.
The panelboard shall be 120/240V single phase, mounted inside building. Illumination levels will be designed in accordance with IES. Fixtures with red lamps on separate switching shall be placed near each white incandescent lamp. Incandescent fixtures shall be gasket, vapor proof enclosed with guard. Exterior white and red lighting shall be provided with separate switching located near the points of egress.

Explosion-proof fixtures: Fixtures are not required to be explosion proof unless end users determine that there is a need to store ammunition in the facility.
A telephone system is not required.

Mast type lightning protection in accordance with DA PAM 385-64 is required for this building.

Fire Protection

Fire protection is not required per fire codes for this building. The fire alarm shall be a local audible alarm. Fire extinguisher's and cabinets are required per NFPA. Consult local Fire Marshall for compliance with local requirements. Provide a Mass Notification system per UFC.

4' 2' 0 4' 8' 12'
GRAPHIC SCALE: ¼"=1'-0"

US Army Corps of Engineers

| Rev. | Description | Date | Approved |
|---|---|---|---|
| | | | |

Designed by: | Date: | Rev.
Dwn by: | Ckd by: | Design file no.
Reviewed by: | Drawing code:
Submitted by: | File name / Dwg number / Proj. number

U. S. ARMY ENGINEERING AND SUPPORT CENTER, HUNTSVILLE
HUNTSVILLE, ALABAMA

MARCH 2011

RANGE AND TRAINING LAND PROGRAM
STANDARD DESIGN MANUAL

AMMUNITION BREAKDOWN BUILDING

Sheet reference number:
A–09