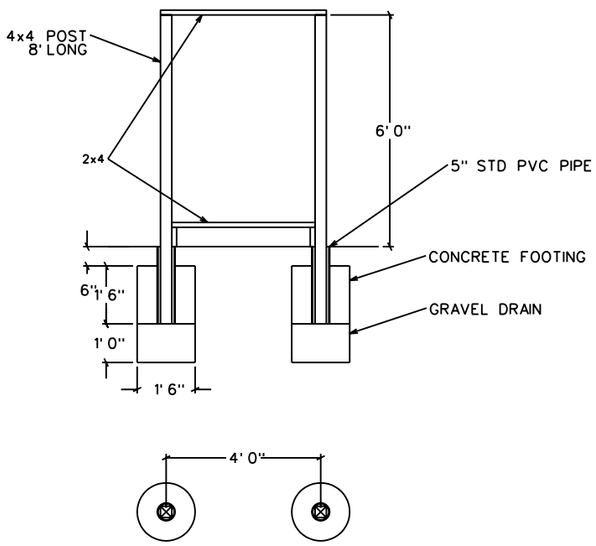

TARGET BOOT DETAIL

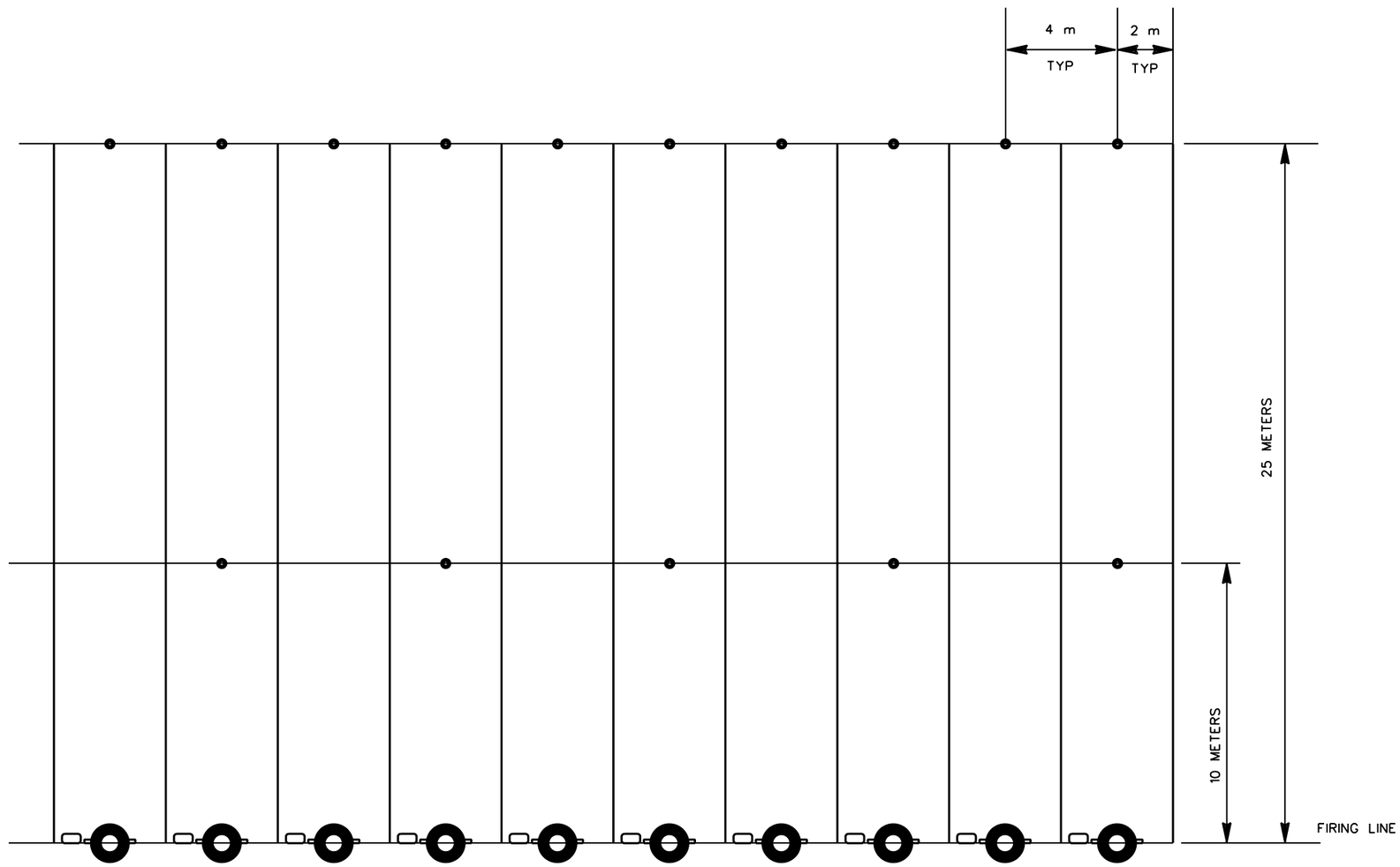

LEGEND

- FOXHOLE FIRING POINT
- V-NOTCH RIFLE RESTING PEG
- SANDBAGS
- TARGET BOOT

NOTES:

10 LANES SHOWN OF 32 LANE RANGE

FIRING POINT AND TARGET ARE ON A FLAT PLANE +/- 1°

US Army Corps of Engineers

Rev #	Description	Date	Approved

Designed by: | Date: | Rev.
Dwn by: | Ckd by: | Design file no.
Reviewed by: | Drawing code:
Submitted by: | File name: Plot date: Plot scale:

U. S. ARMY ENGINEERING AND SUPPORT CENTER, HUNTSVILLE
HUNTSVILLE, ALABAMA

15 APR, 2005

RANGE AND TRAINING LAND PROGRAM
STANDARD DESIGN MANUAL

FCC= 17801
25 M ZERO RANGE

Sheet reference number:
25Z-C-1

Sheet of